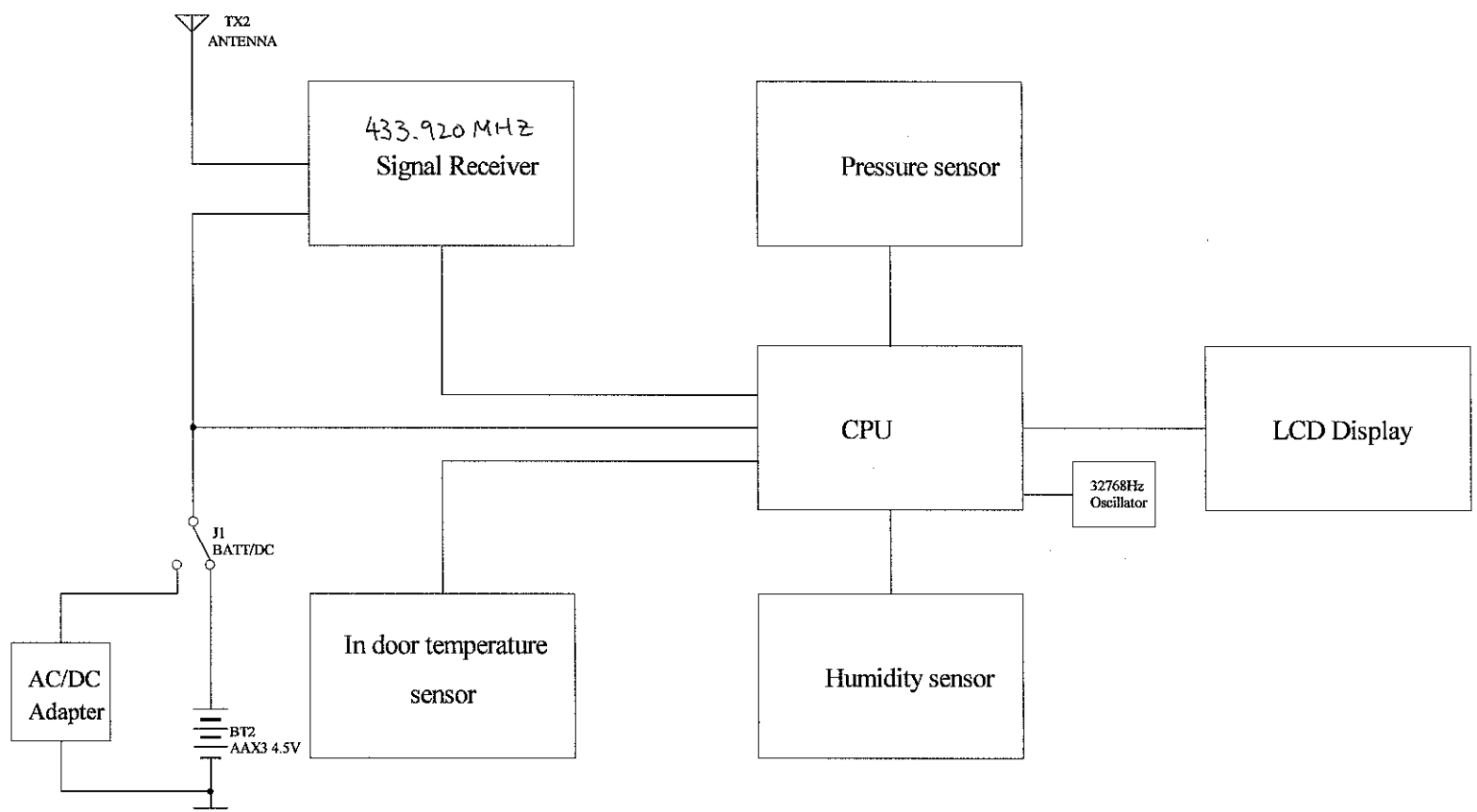

Title: 433MHz Thermo-Hygro Receiver Block diagram		
Size: A4	Number: DG950	Revision: D
Date: 24-Feb-2005	Sheet of	
File: \\victoria\departments\ele eng\電子工程\Dragon\Ele-eng all file\xiaofuhua\YingLeung\		