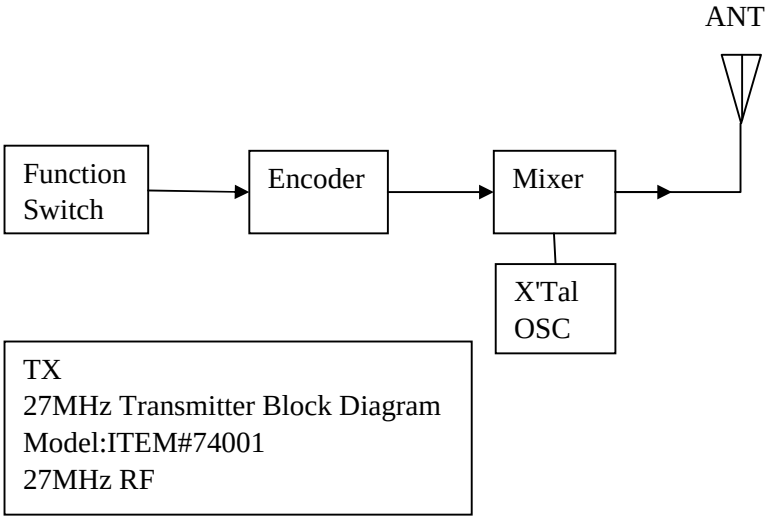
ANT
Function Switch
Encoder
Mixer
X'Tal OSC
TX
27MHz Transmitter Block Diagram
Model:ITEM#74001
27MHz RF