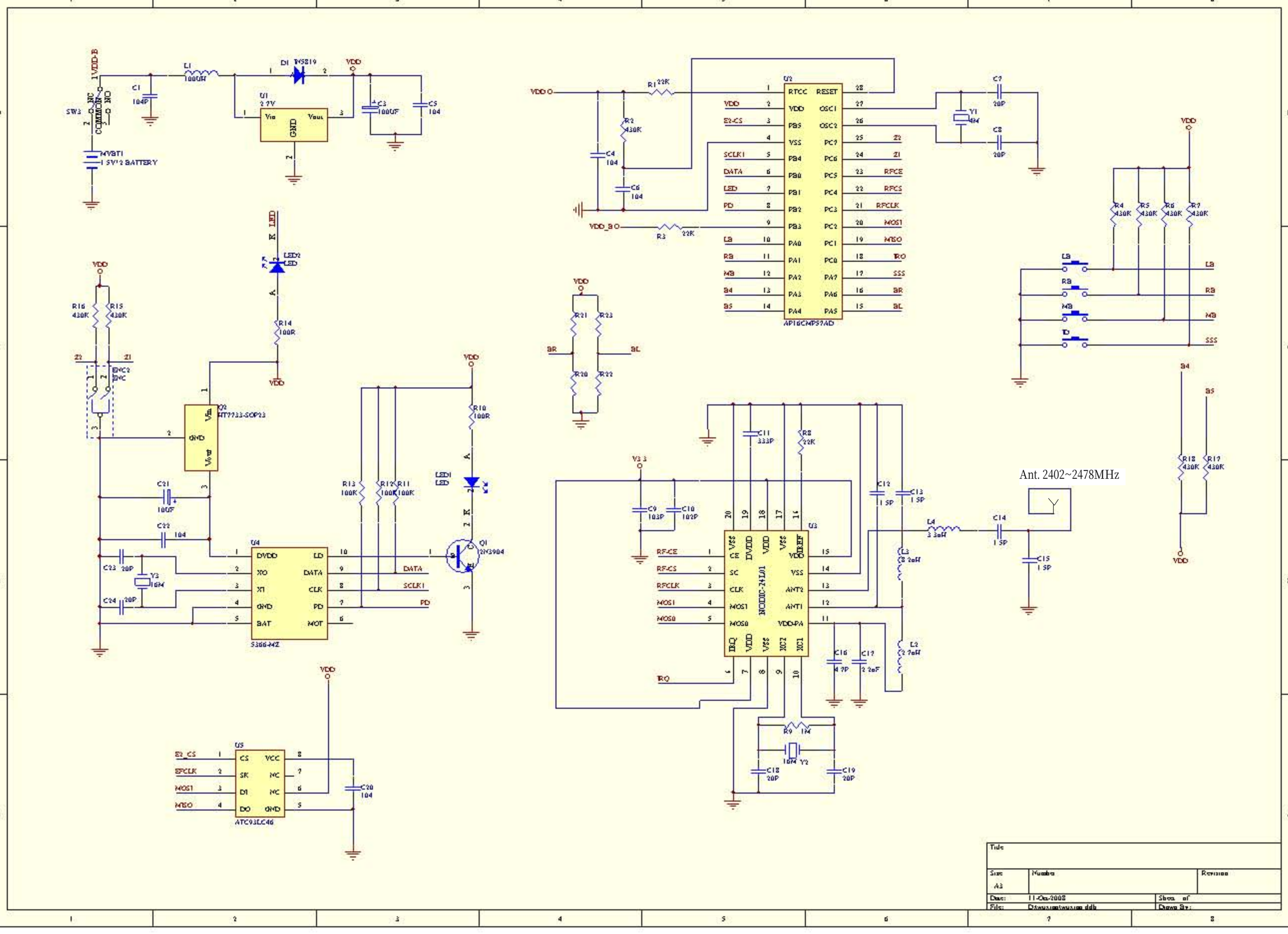
Ant. 2402~2478MHz
AP16CM9S7AD
NRF24L01
S366-4Z
ATC93LC46
Title
Size
A3
Number
Revision
Date:
File:
Sheet of
Drawn By: