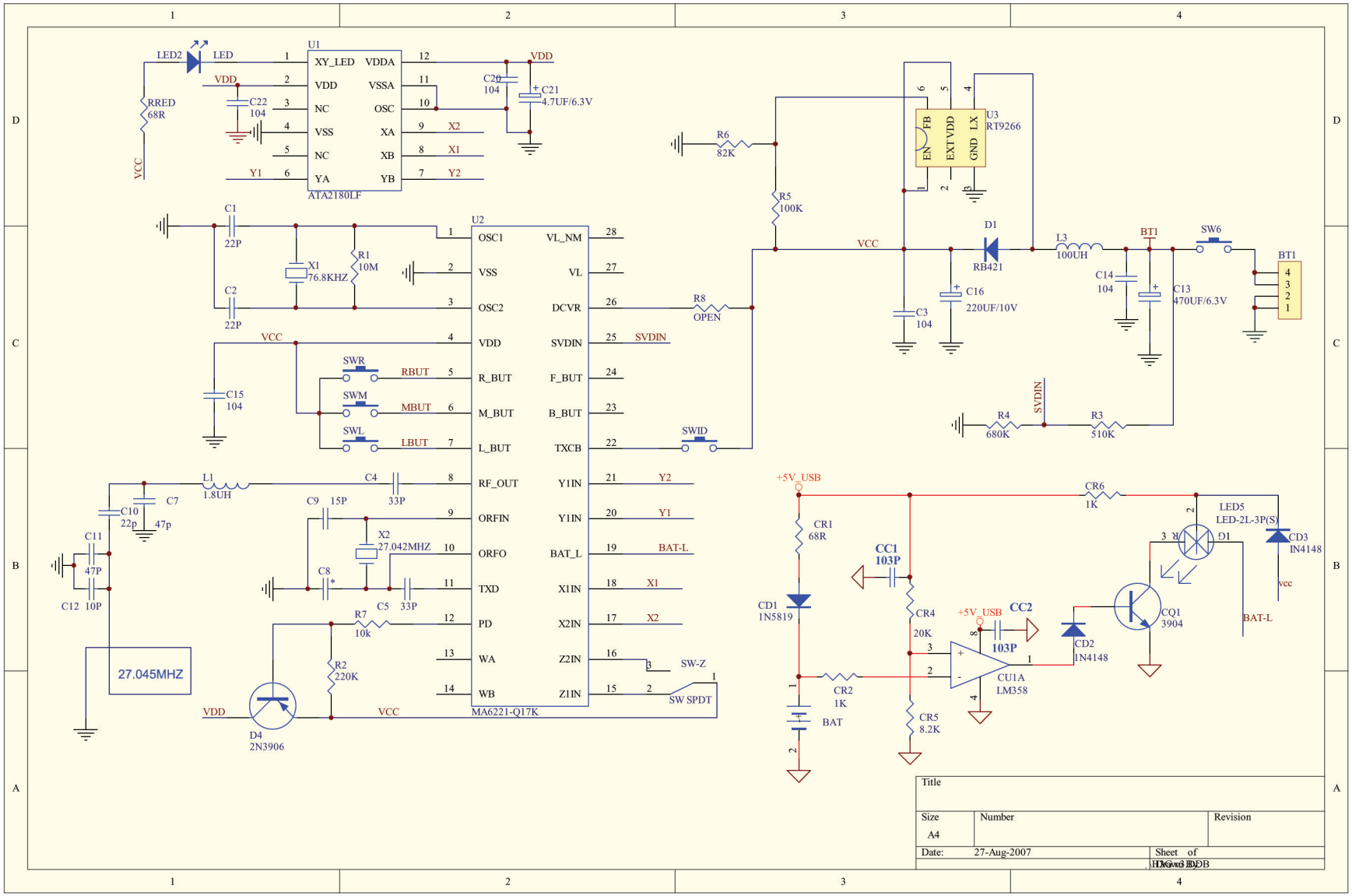
U1
ATA2180LF
XY_LED
VDD
NC
VSS
NC
YA
VDDA
VSSA
OSC
XA
XB
YB
LED2
LED
RRED
68R
VCC
VDD
C22
104
C20
104
C21
4.7UF/6.3V
X2
X1
Y1
Y2
U2
MA6221-Q17K
OSC1
VSS
OSC2
VDD
R_BUT
M_BUT
L_BUT
RF_OUT
ORFIN
ORFO
TXD
PD
WA
WB
VL_NM
VL
DCVR
SVDIN
F_BUT
B_BUT
TXCB
Y1IN
Y1IN
BAT_L
X1IN
X2IN
Z2IN
Z1IN
C1
22P
C2
22P
X1
76.8KHZ
R1
10M
C15
104
SWR
SWM
SWL
RBUT
MBUT
LBUT
R8
OPEN
SWID
SW-Z
SW SPDT
L1
1.8UH
C4
33P
C7
47p
C10
22p
C11
47P
C12
10P
C9
15P
X2
27.042MHZ
C8
C5
33P
R7
10k
R2
220K
D4
2N3906
27.045MHZ
R6
82K
R5
100K
U3
RT9266
EN
FB
EXT VDD
GND
LX
D1
RB421
C16
220UF/10V
C3
104
L3
100UH
BT1
SW6
C14
104
C13
470UF/6.3V
R4
680K
R3
510K
SVDIN
+5V_USB
CR1
68R
CD1
1N5819
CC1
103P
CR4
20K
CR2
1K
BAT
CR5
8.2K
CC2
103P
CU1A
LM358
CD2
1N4148
CR6
1K
LED5
LED-2L-3P(S)
CD3
IN4148
CQ1
3904
BAT-L
vcc
Title
Size
A4
Number
Revision
Date:
27-Aug-2007
Sheet of