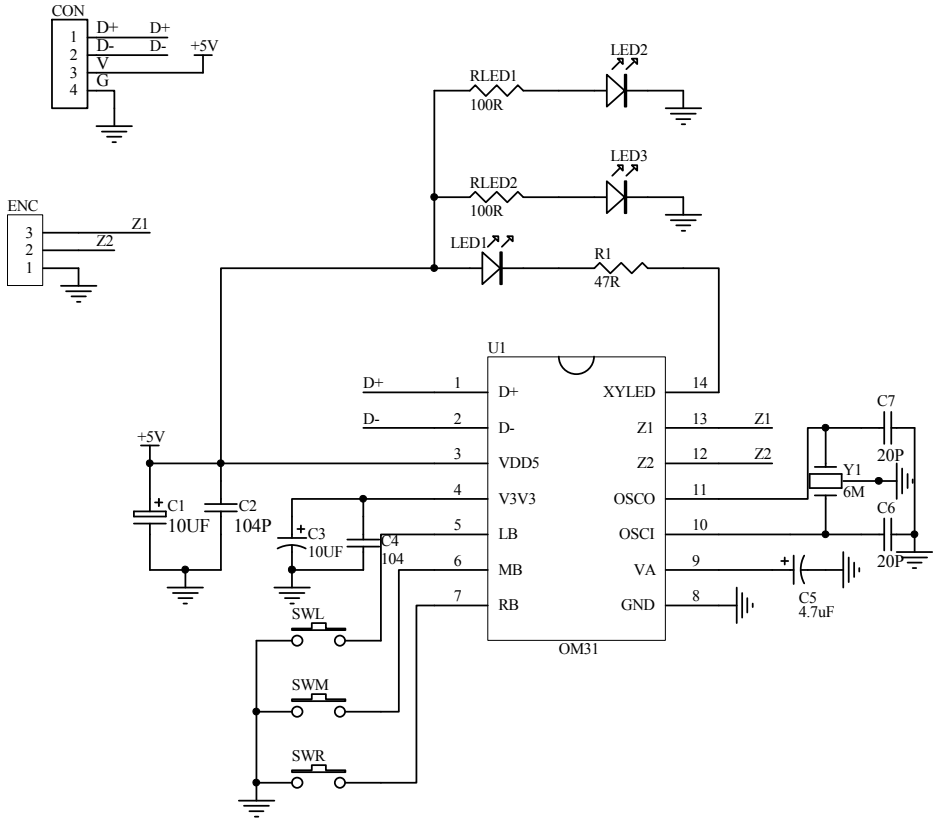

Title		
Size A4	Number	Revision
Date: 11-Oct-2010	Sheet of	
File: E:\1file\0WORK Protel99 File\H21\H21 OM16WS-B\2010-9-6.Ddb		