15 April 2013

Product: ***IntelliMax***™ Series

Models: 1. ***ULL-3000***, 2. ***MB-2000***
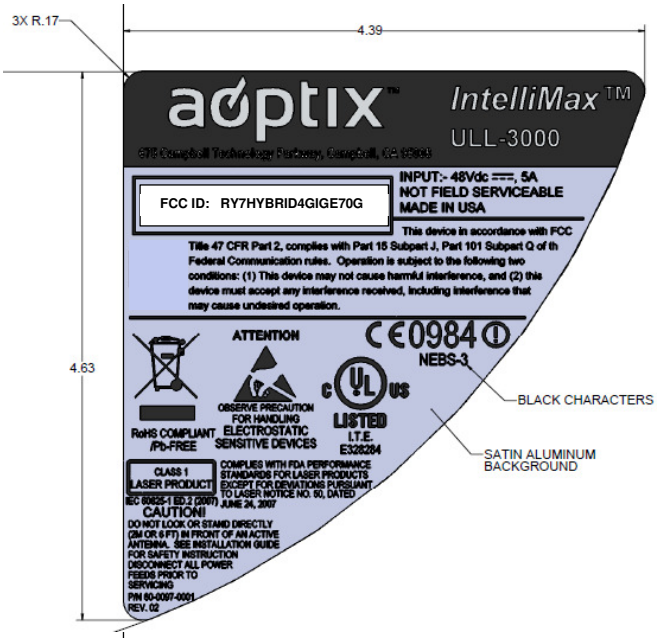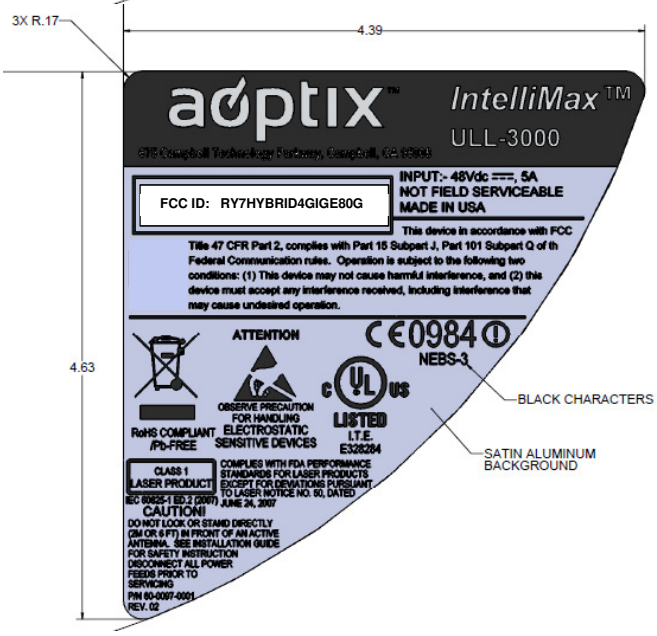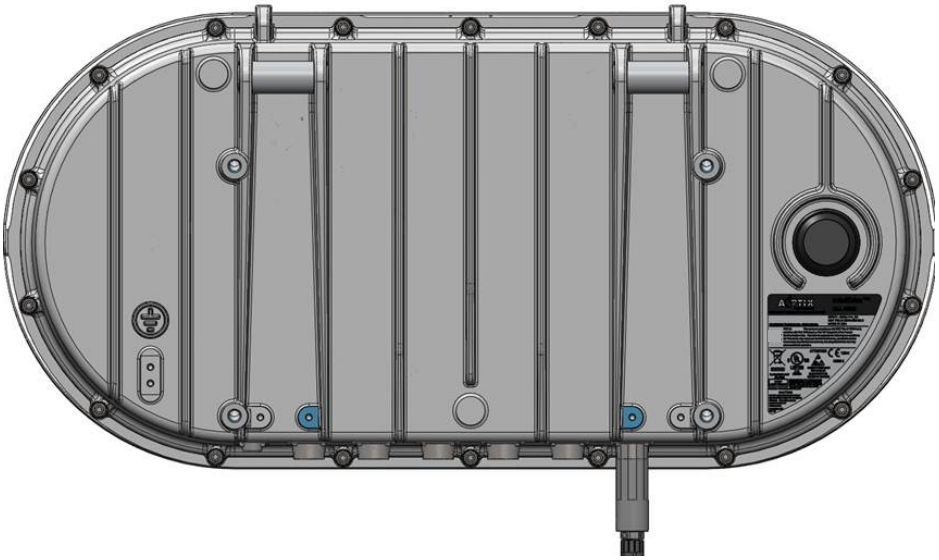
Subject: FCC Label & Location