1. WAVEGUIDE WELDED ASSEMBLY (ROD OR HORN / THREADED OR FLANGED)
2. WAVEGUIDE INSERT
3. HERMETIC SEAL / AERIAL PIN ASSEMBLY
4. HOUSING AND LID
5. POTTING BOX
6. POTTING COMPOUND
7. CONTROL PCB ASSEMBLY
8. MICROWAVE PCB ASSEMBLY
9. ANTENNA CABLE ASSY
10. PCB CABLE ASSEMBLY
11. O-RING SEAL HOUSING LID
12. O-RING SEAL ANTENNA
13. O-RING SEAL WAVEGUIDE INSERT
14. FACIA PANEL
15. LABEL - PRODUCT
16. LABEL - RATING
17. DRIVE PIN
18. EARTH TAG ASSEMBLY
19. LOCKING SCREW
20. LOCK CLIP AND FIXING
21. FIXING SCREW - FACIA AND POTTING BOX

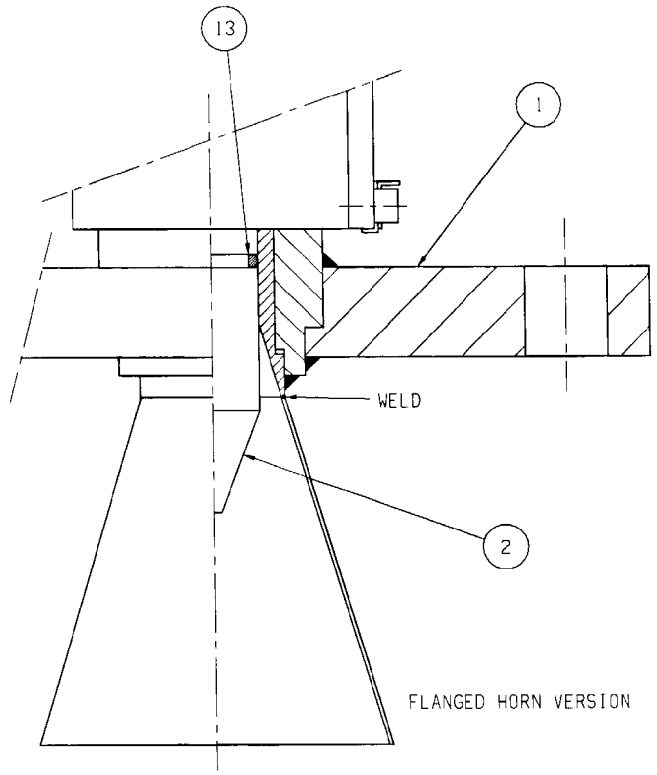

FLANGED HORN VERSION

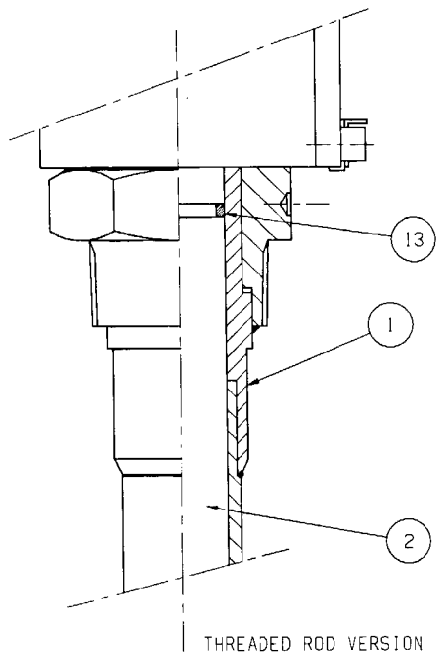

THREADED ROD VERSION

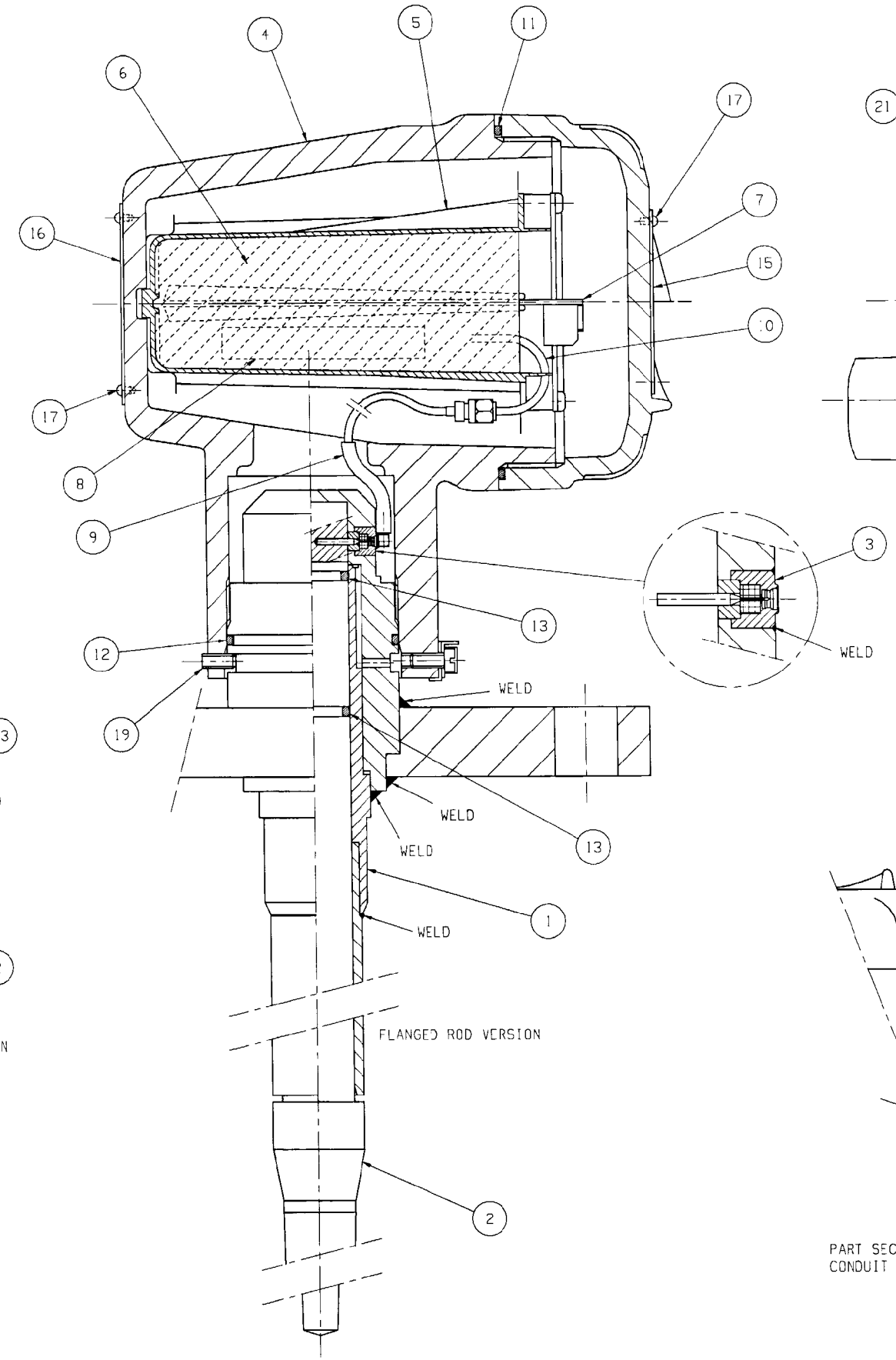

FLANGED ROD VERSION

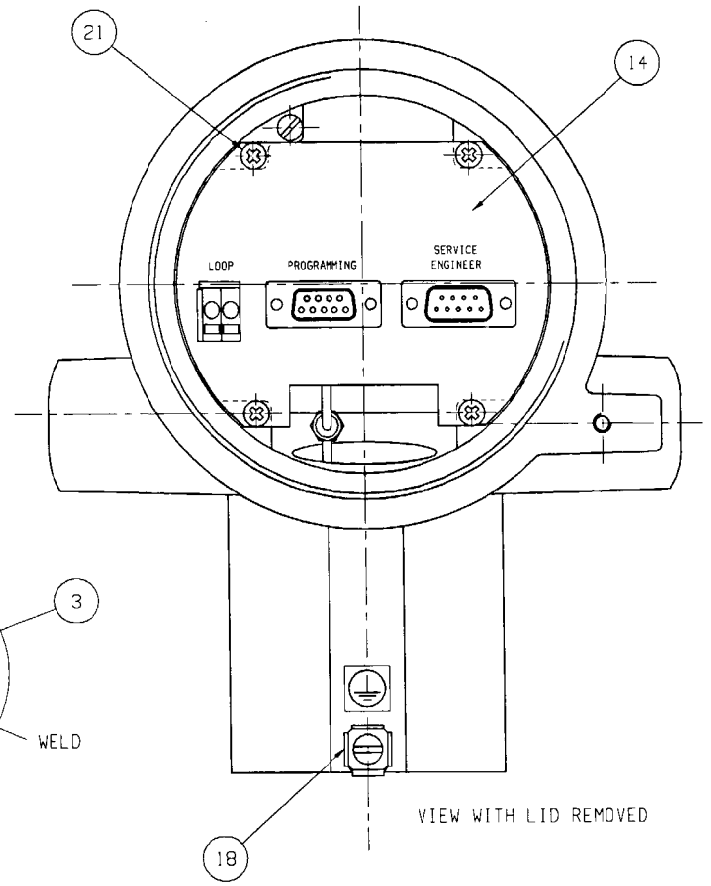

VIEW WITH LID REMOVED

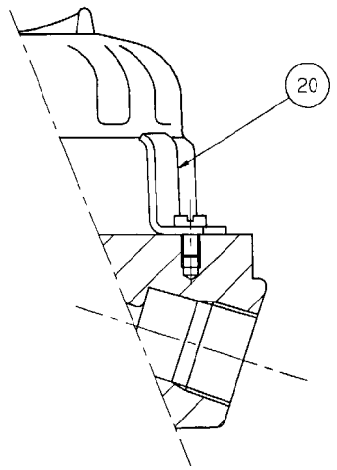

PART SECTION THROUGH BOSS SHOWING CONDUIT ENTRY AND LID CLAMP

CERTIFIED PRODUCT
ALTERATIONS TO THIS DOCUMENT MUST BE APPROVED BEFORE IMPLEMENTATION.

APPROVAL DRAWING - FCC

Signed for on behalf of SOLARTRON MOBREY LTD.

19 JUL 2004

DIMENSIONS IN MILLIMETRES UNLESS OTHERWISE STATED				SOLARTRON MOBREY	PROJECTION
A1 DRAWING ON CAD				ALL DIMENSIONS TO BE WITHIN THE FOLLOWING TOLERANCES UNLESS OTHERWISE SPECIFIED :- 1 DECIMAL PLACE OF METRIC ±0.4 2 DECIMAL PLACES OF METRIC ±0.25	PRINT MAY NOT BE TO SCALE STATED. IF IN DOUBT ABOUT DIMENSIONS THEN ASK.
1	10/6/04	ST2672	PCG		
ISS	DATE	CHANGE NOTE	NAME		
MATERIAL		MAT'L SPEC.		FINISH	FINISH SPEC.
					SCALE 1/1

ALL UNSPECIFIED FEATURES TO COMPLY WITH COMPANY STANDARD 201C

TITLE RADAR LEVEL TRANSMITTER GEN. ASSY

DRAWN	DATE	CHECKED	DRG. NO.
PCG	2/6/04		71097/1113

CHECKED BY DRH AT ISSUE 1

CHECKED BY DRH AT ISSUE 1