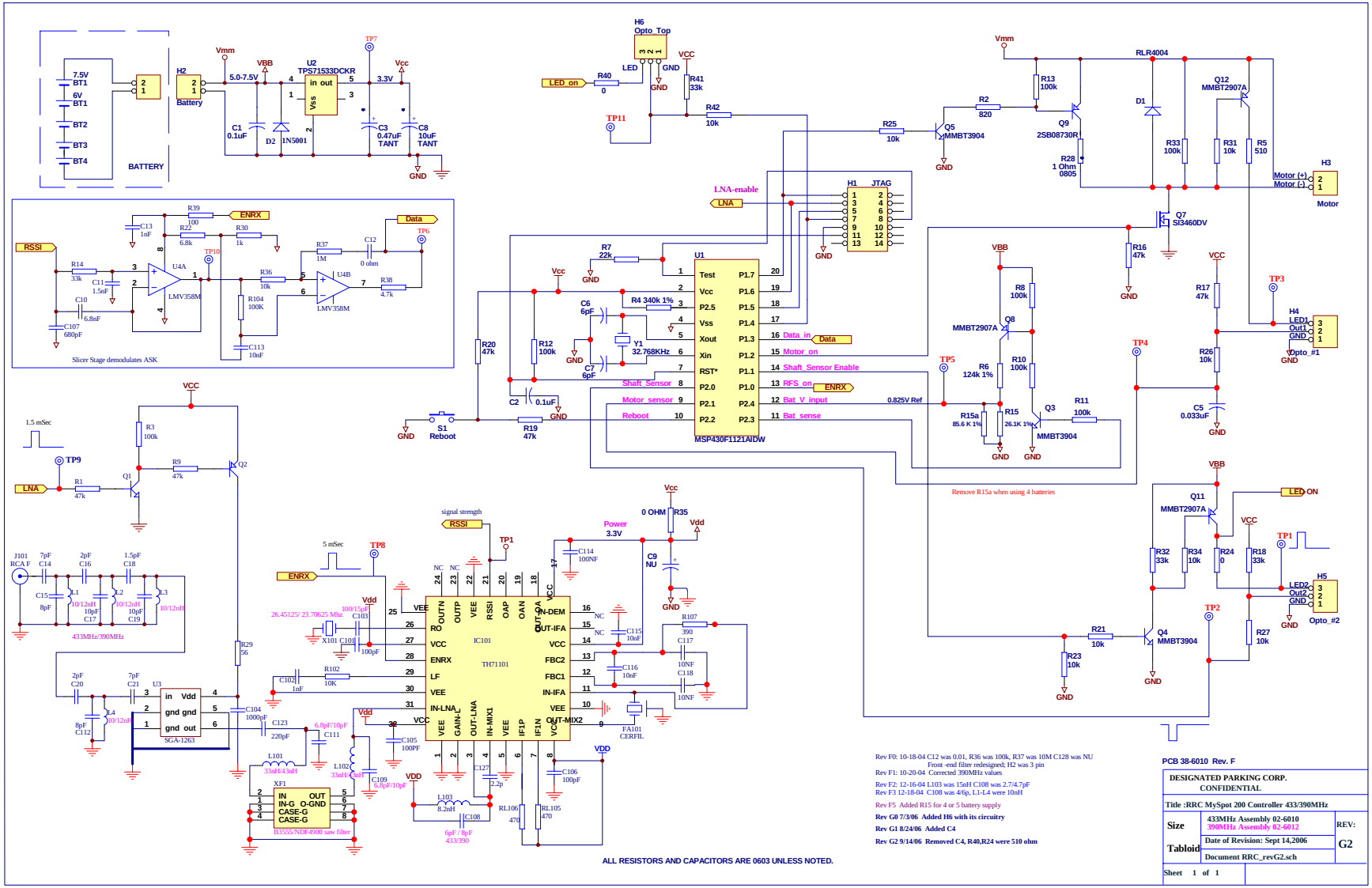

Rev F0: 10-18-04 C12 was 0.01, R36 was 100k, R37 was 10M C128 was NU
Front -end filter redesigned; H2 was 3 pin
Rev F1: 10-20-04 Corrected 390MHz values
Rev F2: 12-16-04 L103 was 15nH C108 was 2.7/4.7pF
Rev F3 12-18-04 C108 was 4/6p, L1-L4 were 10nH
Rev F5 Added R15 for 4 or 5 battery supply
Rev G0 7/3/06 Added H6 with its circuitry
Rev G1 8/24/06 Added C4
Rev G2 9/14/06 Removed C4, R40,R24 were 510 ohm

PCB 38-6010 Rev. F

DESIGNATED PARKING CORP. CONFIDENTIAL		
Title :RRC MySpot 200 Controller 433/390MHz		
Size: Tabloid	433MHz Assembly 02-6010 390MHz Assembly 02-6012	REV: G2
	Date of Revision: Sept 14,2006	
	Document RRC_revG2.sch	
Sheet 1 of 1		