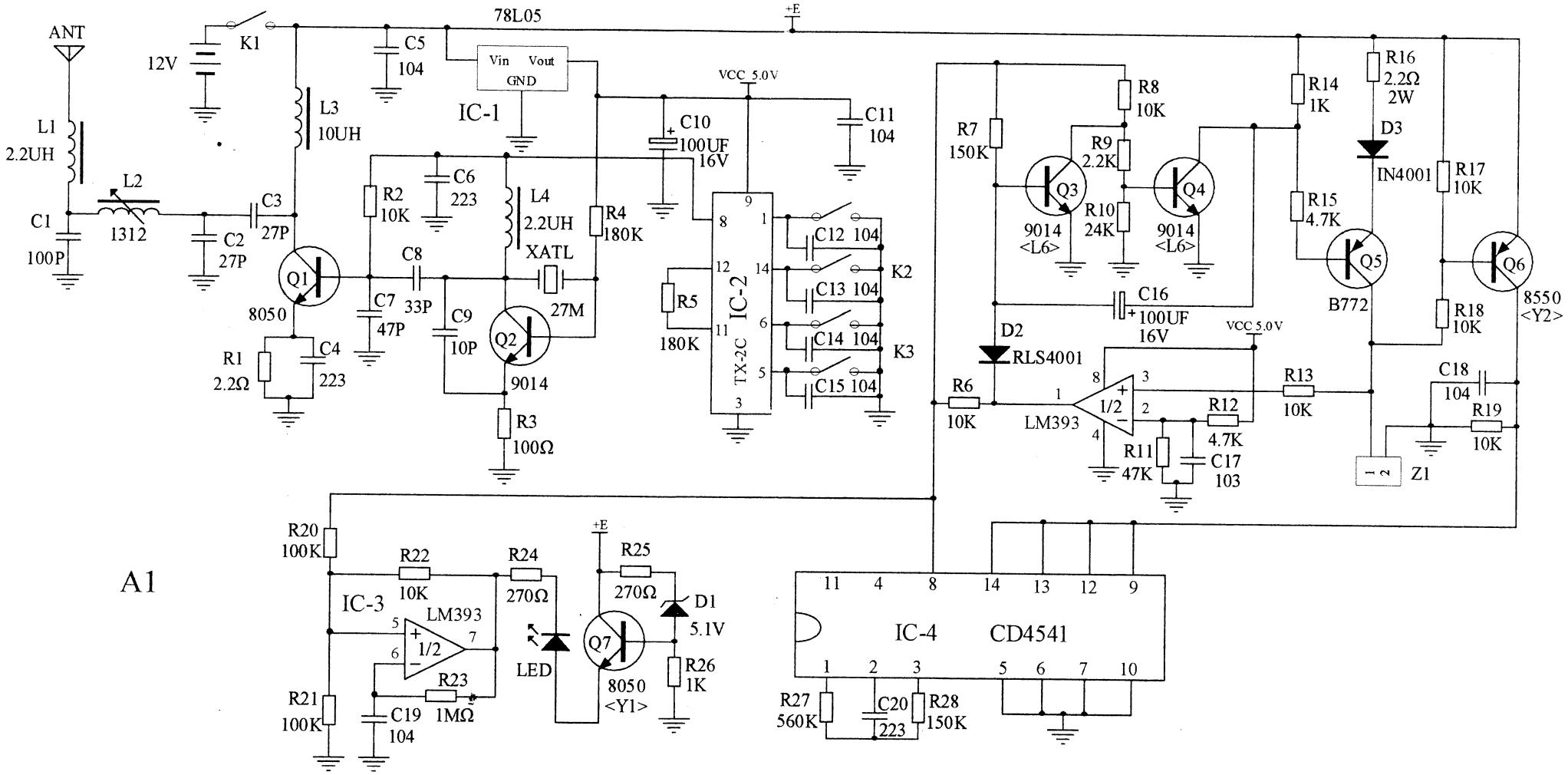

R29.R30.R31.R32.R33.R34.R35.R36=0

Title	发射机原理图	
Size B	Number	Revision
Date: 2008-10-20		Sheet of
File: E:\FCC认证\SD-KTX4CH-V1.SCHDOC		Drawn By: