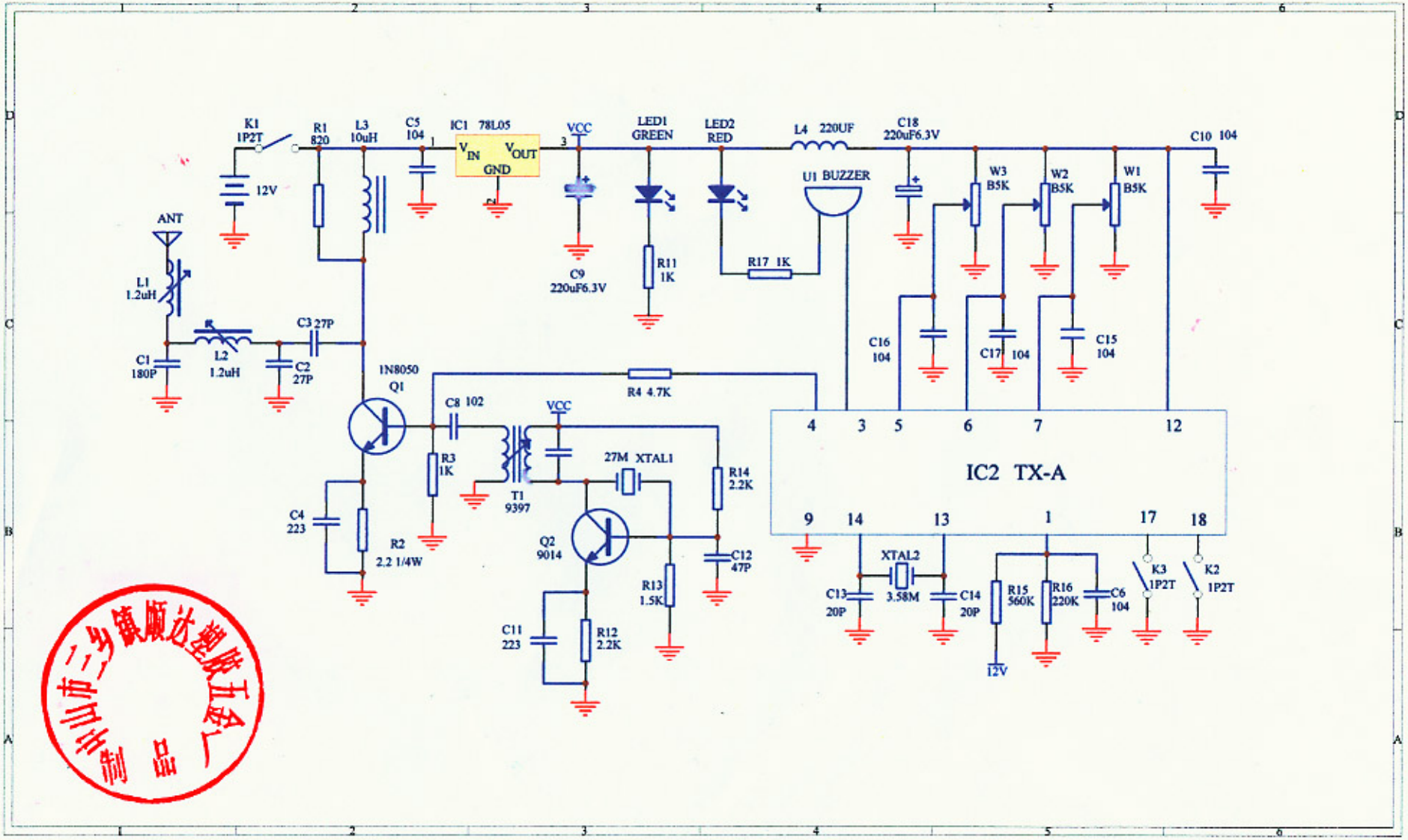
K1
1P2T
12V
R1
820
L3
10uH
C5
104
IC1 78L05
VIN
VOUT
GND
VCC
LED1
GREEN
LED2
RED
L4 220UF
C18
220uF6.3V
C10 104
U1 BUZZER
W3
B5K
W2
B5K
W1
B5K
ANT
L1
1.2uH
C9
220uF6.3V
R11
1K
R17 1K
C3 27P
C1
180P
L2
1.2uH
C2
27P
C16
104
C17 104
C15
104
1N8050
Q1
R4 4.7K
C8 102
VCC
R3
1K
T1
9397
27M XTAL1
R14
2.2K
IC2 TX-A
C4
223
R2
2.2 1/4W
Q2
9014
C12
47P
R13
1.5K
C11
223
R12
2.2K
XTAL2
3.58M
C13
20P
C14
20P
R15
560K
R16
220K
C6
104
K3
1P2T
K2
1P2T
12V