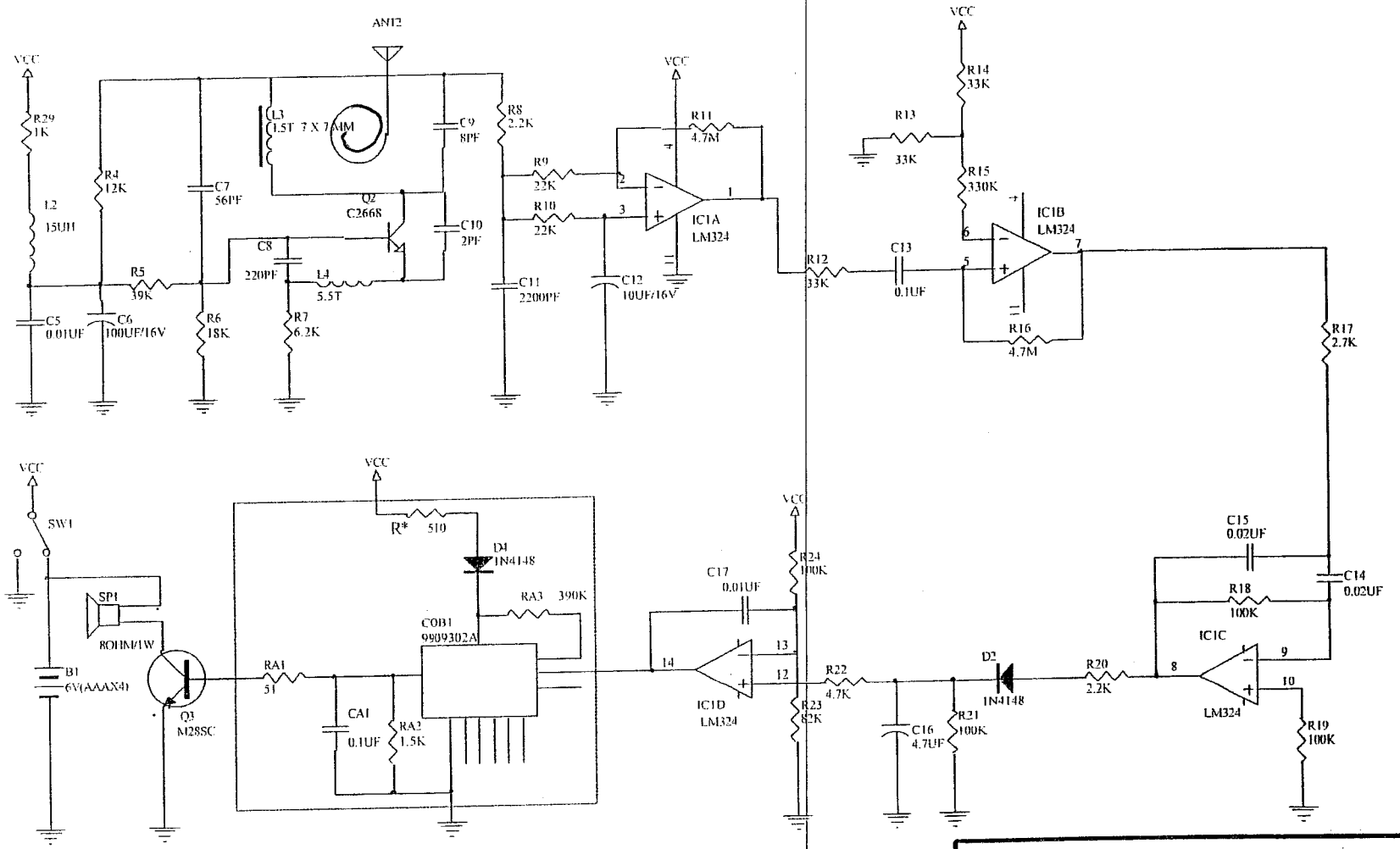

CREATIVE INDUSTRIAL LTD			
DESIGNED		NAME	MF130RX
CHECKED BY		REV	1
PERMITED BY		DATE	2003-12-21