LAYOUT (REFERENCE)

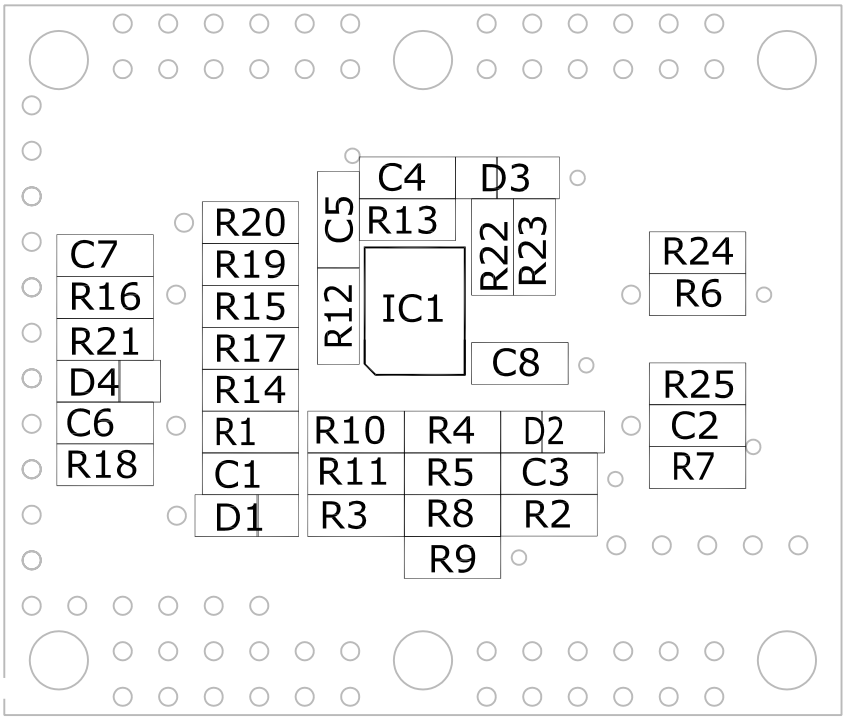
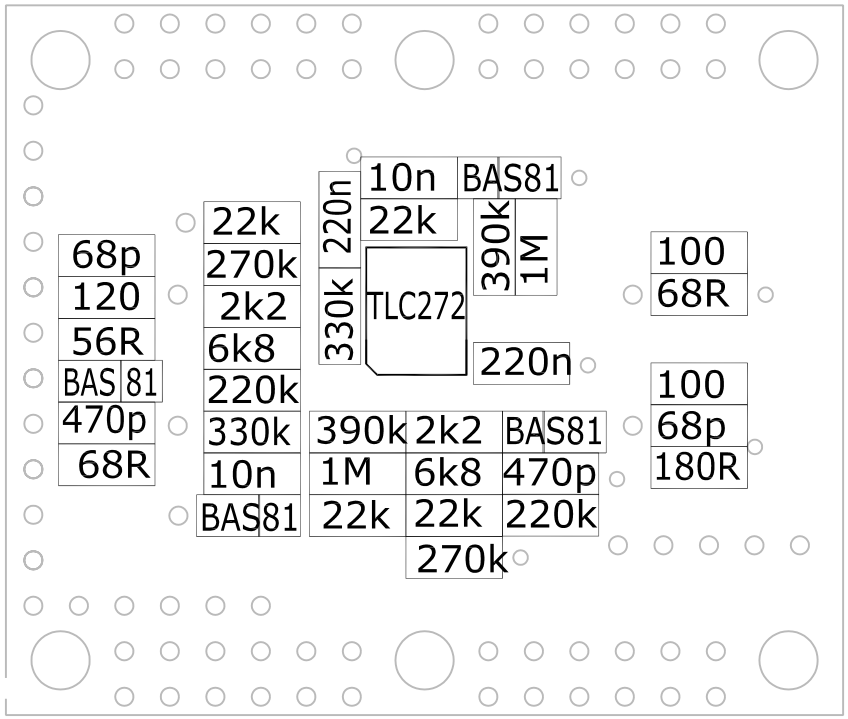
LAYOUT (VALUE)