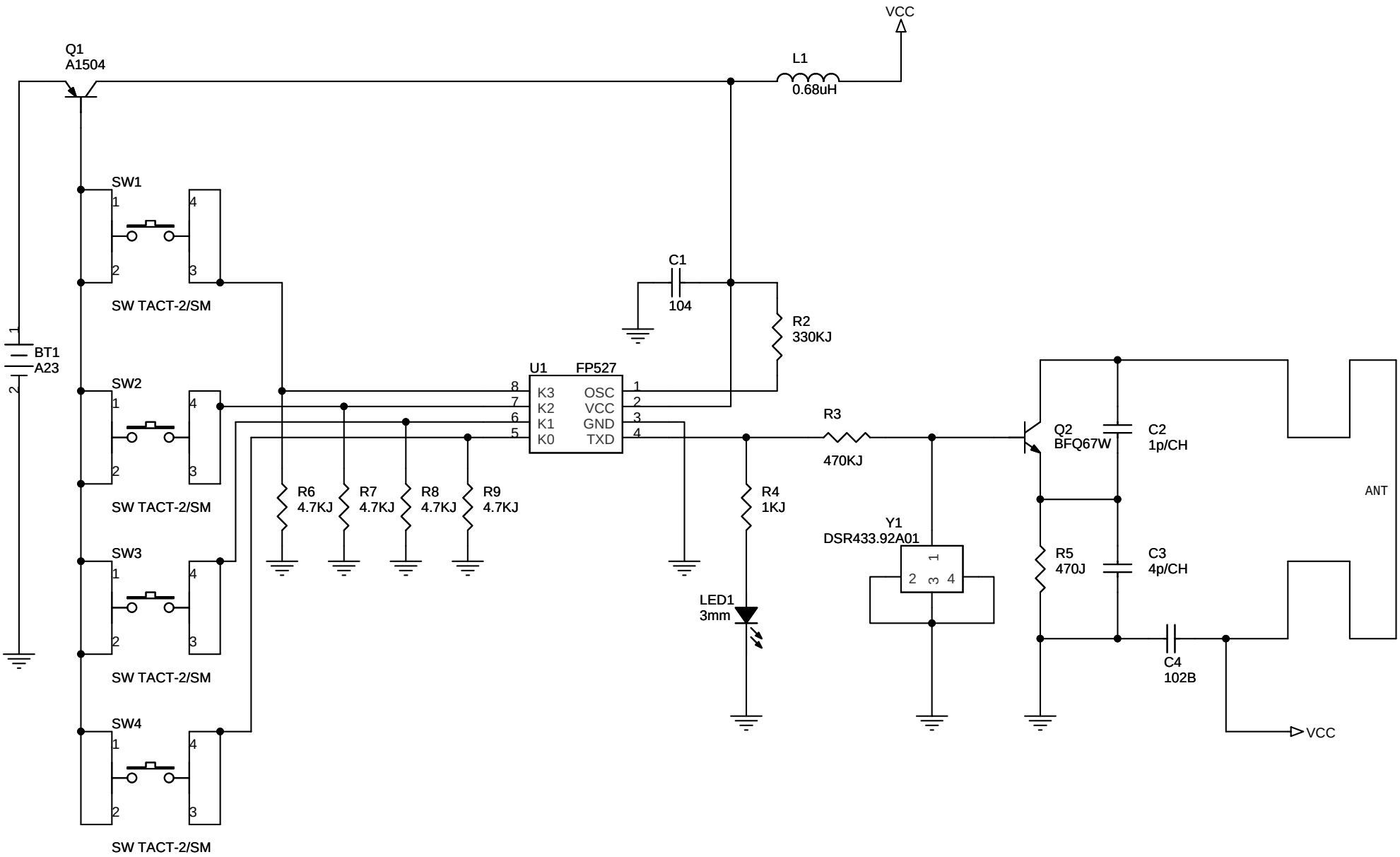

Title	SAINT TX	
Size A	Document Number saint_tx_040119	Rev 100
Date: Wednesday, March 17, 2004	Sheet 1 of 1	