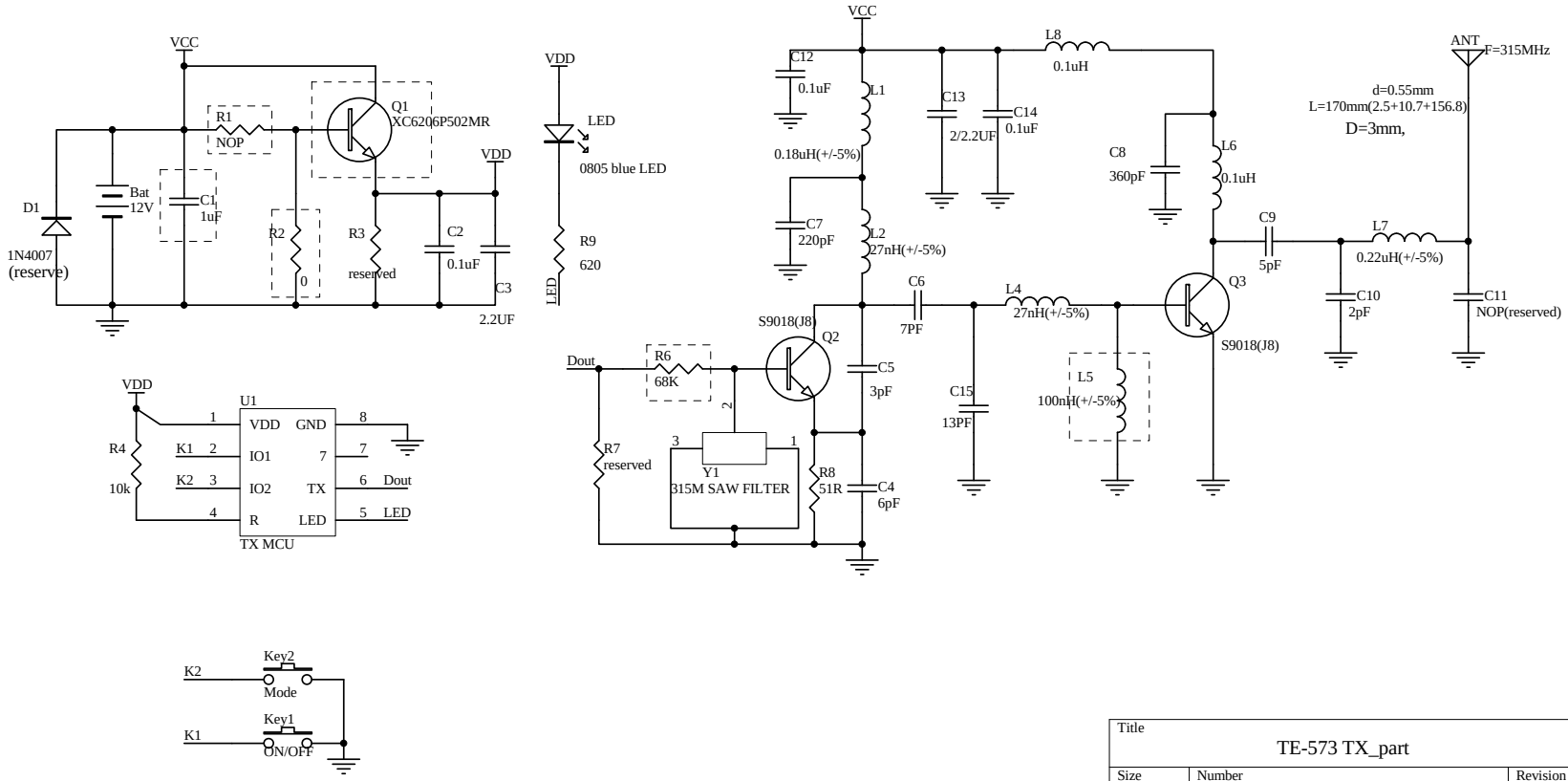

Title		
TE-573 TX_part		
Size: A4	Number: M11010	Revision: A07175
Date: 22-Jan-2013	Sheet of 1/1	
File: D:\circuit_backup\GavinDesign.ddb	Drawn By: M_A	