SCHEMATIC DIAGRAM

Lexicon MV5 FRONT

REVISION RECORD		
NO.	Date	Contents

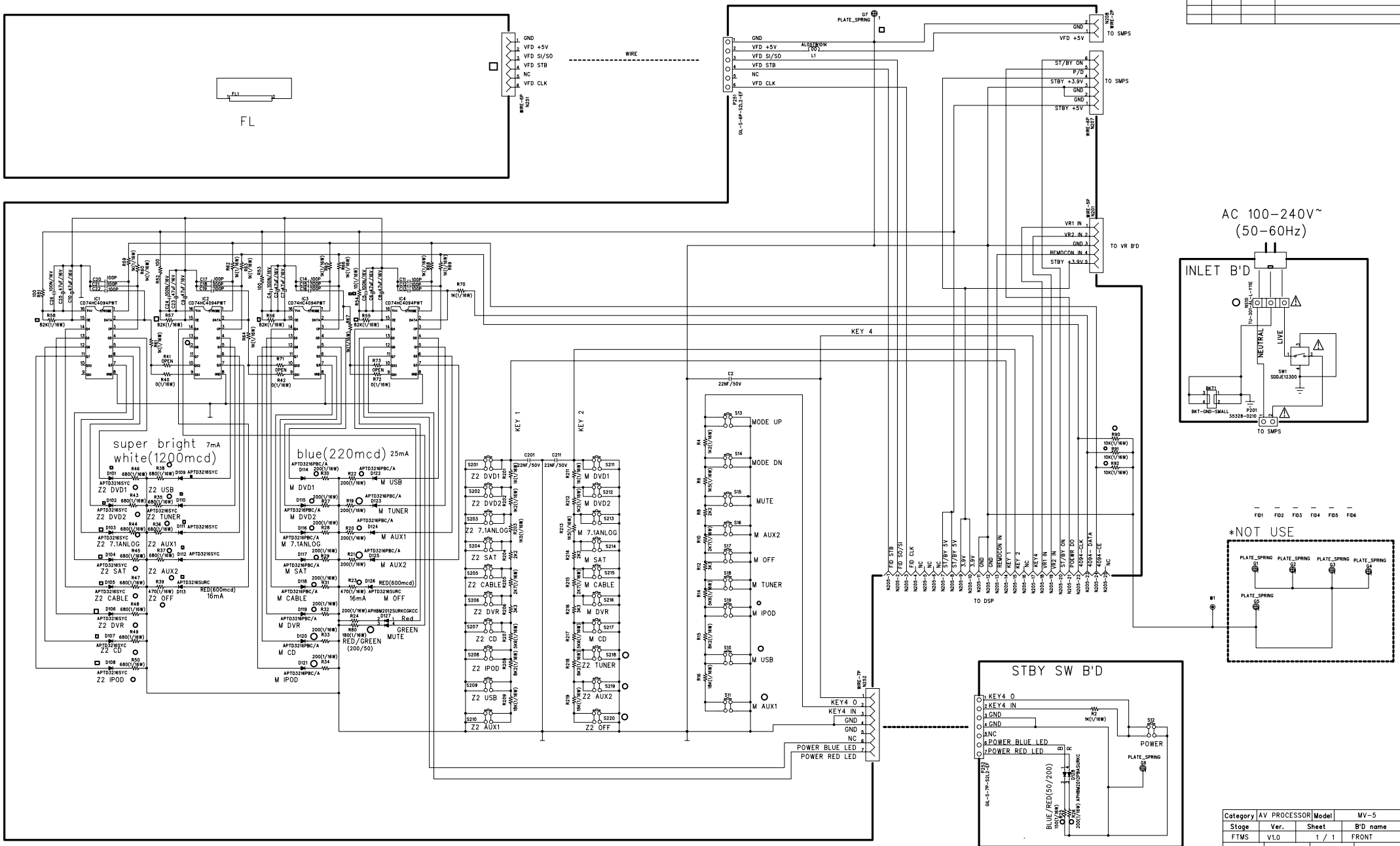

Category	AV PROCESSOR	Model	MV-5
Stage	Ver.	Sheet	B'D name
FTMS	V1.0	1 / 1	FRONT
Draw	Approved	Date	Drawing No
GEUM.J.G		2007.03.29	

DANECH COMPANY LTD.

SCHEMATIC DIAGRAM

Lexicon MV-5 PROCESSOR B'D

REVISION RECORD		
NO.	Date	Contents

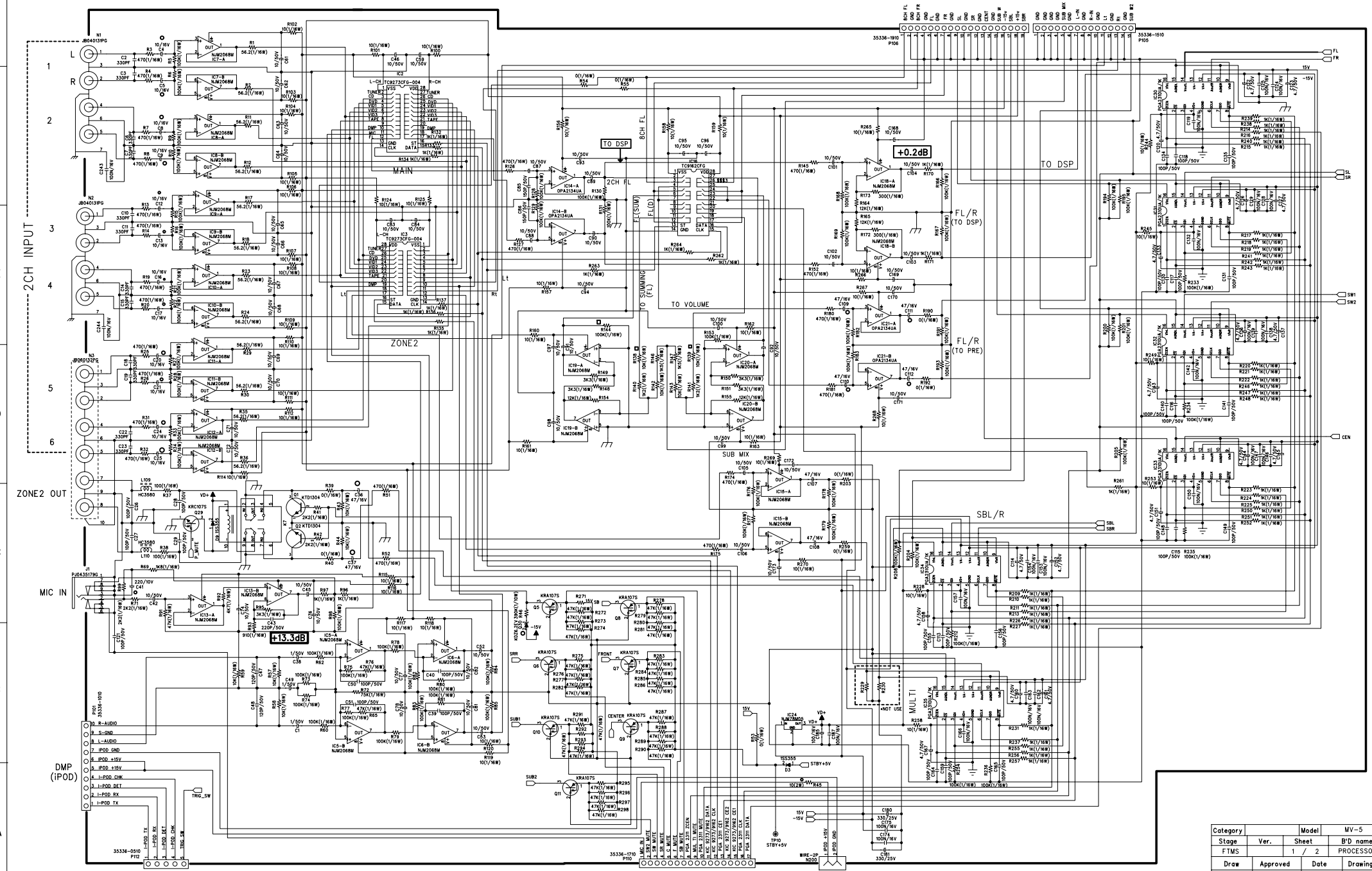

Category		Model	MV-5
Stage	Ver.	Sheet	B'D name
FTMS		1 / 2	PROCESSOR
Draw	Approved	Date	Drawing No
GEUM.J.G		2007.03.29	

DANECH COMPANY LTD.

SCHEMATIC DIAGRAM

Lexicon
MV-5 PROCESSOR B'D

REVISION RECORD		
NO.	Date	Contents

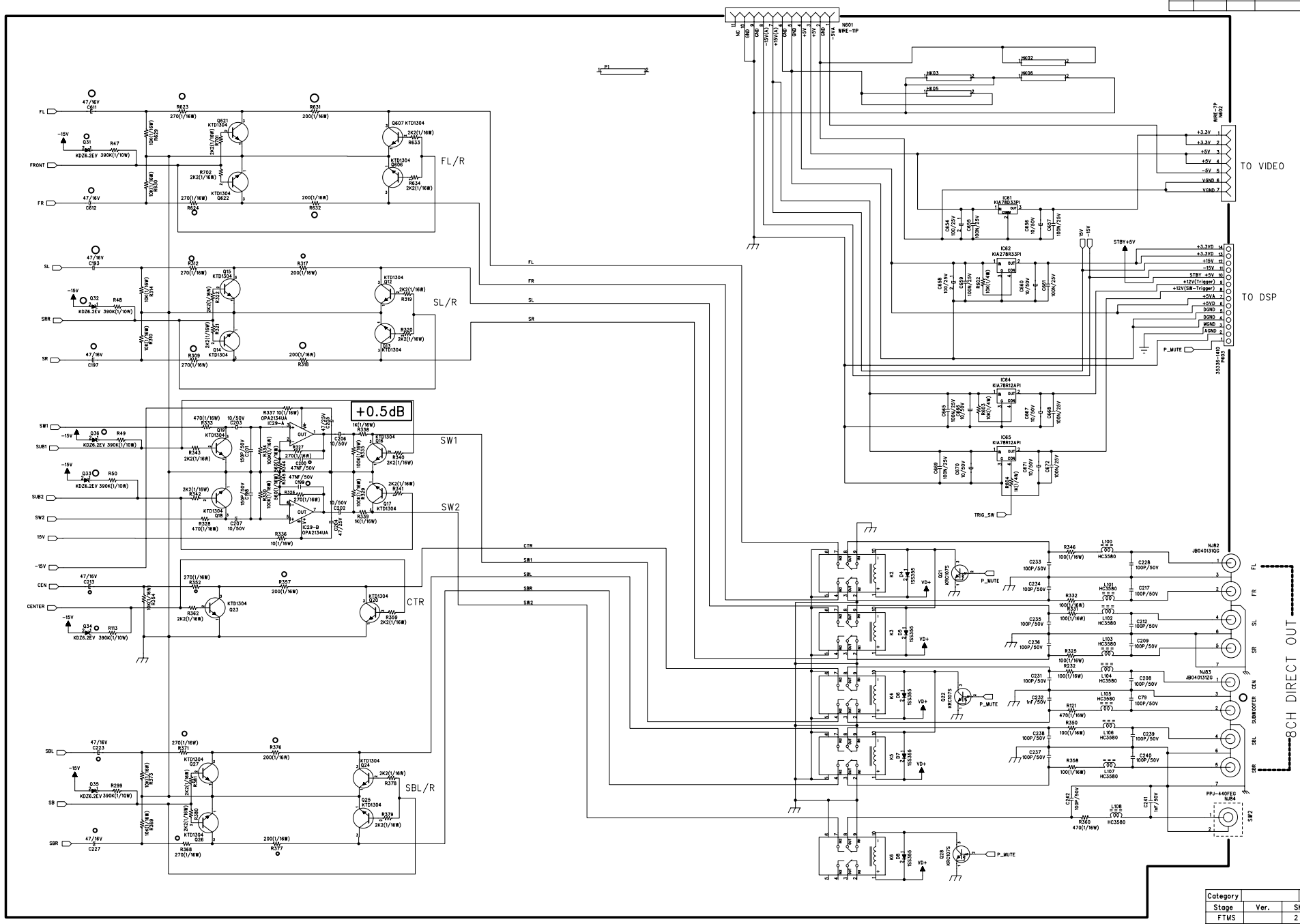

Category		Model	MV-5
Stage	Ver.	Sheet	B'D name
FTMS		2 / 2	PROCESSOR
Draw	Approved	Date	Drawing No
GEUM.J.G		2007.03.29	

DANECH COMPANY LTD.

SCHEMATIC DIAGRAM

Lexicon
MV-5 RS-232 B'D

REVISION RECORD		
NO.	Date	Contents

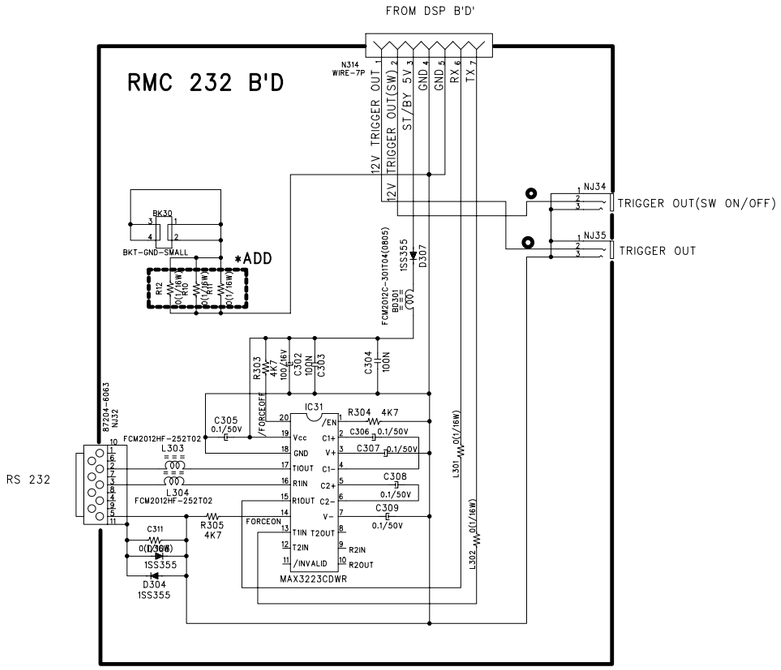

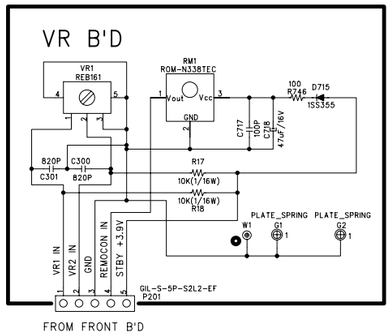

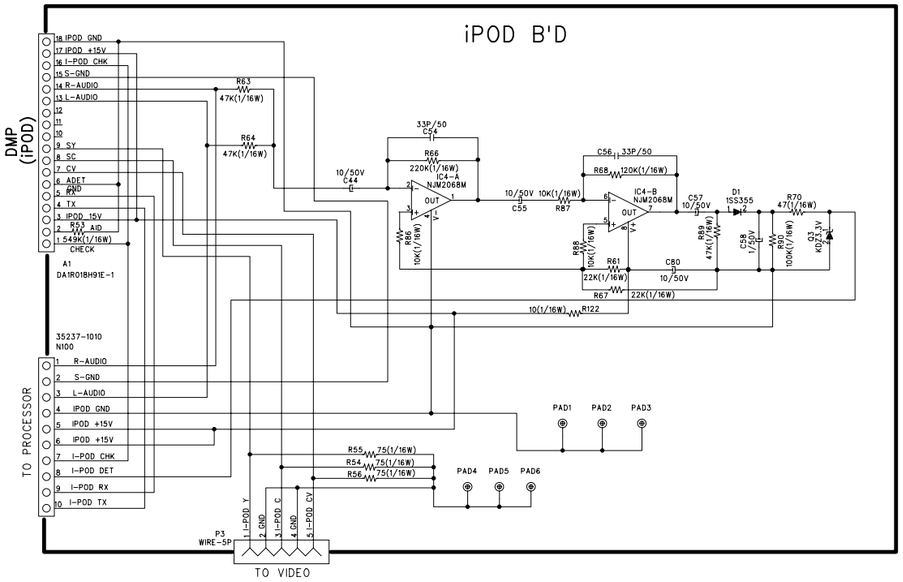

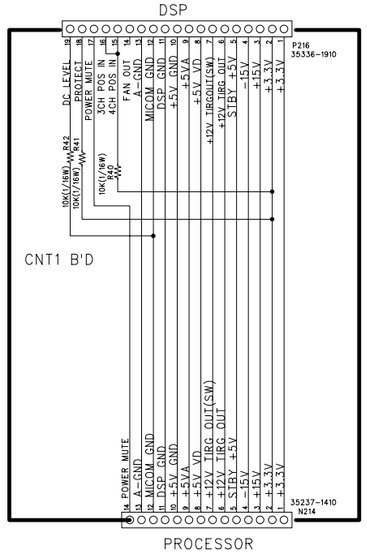

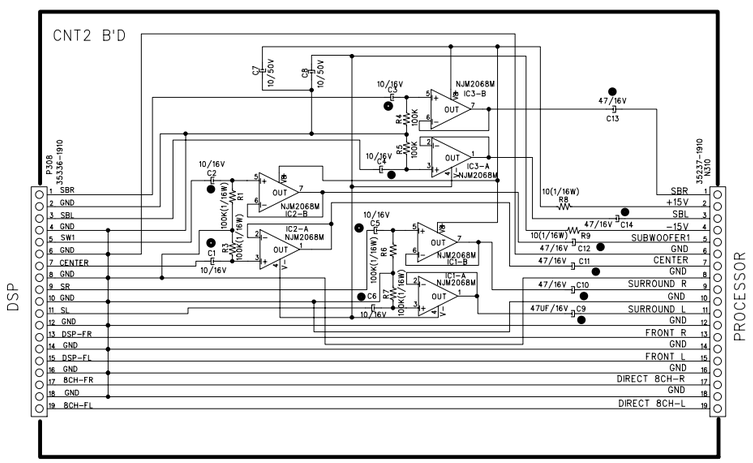

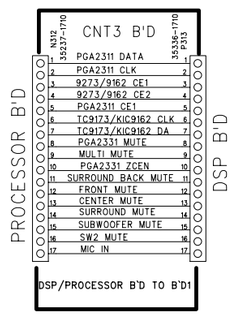

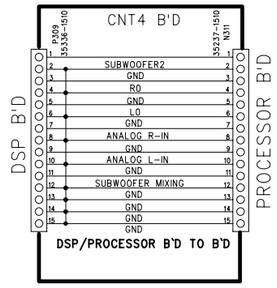

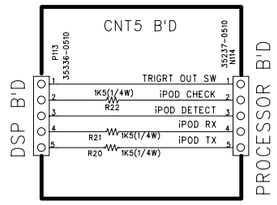

Category	AV PROCESSOR	Model	MV-5
Stage	Ver.	Sheet	B'D name
FTMS	V1.0	1 / 1	RS 232
Draw	Approved	Date	Drawing No
GEUM.J.G		2007.03.29	

DANECH COMPANY LTD.

FTMS

MV5 SCHEMATIC DIAGRAM
MV5 DSP (1/4)

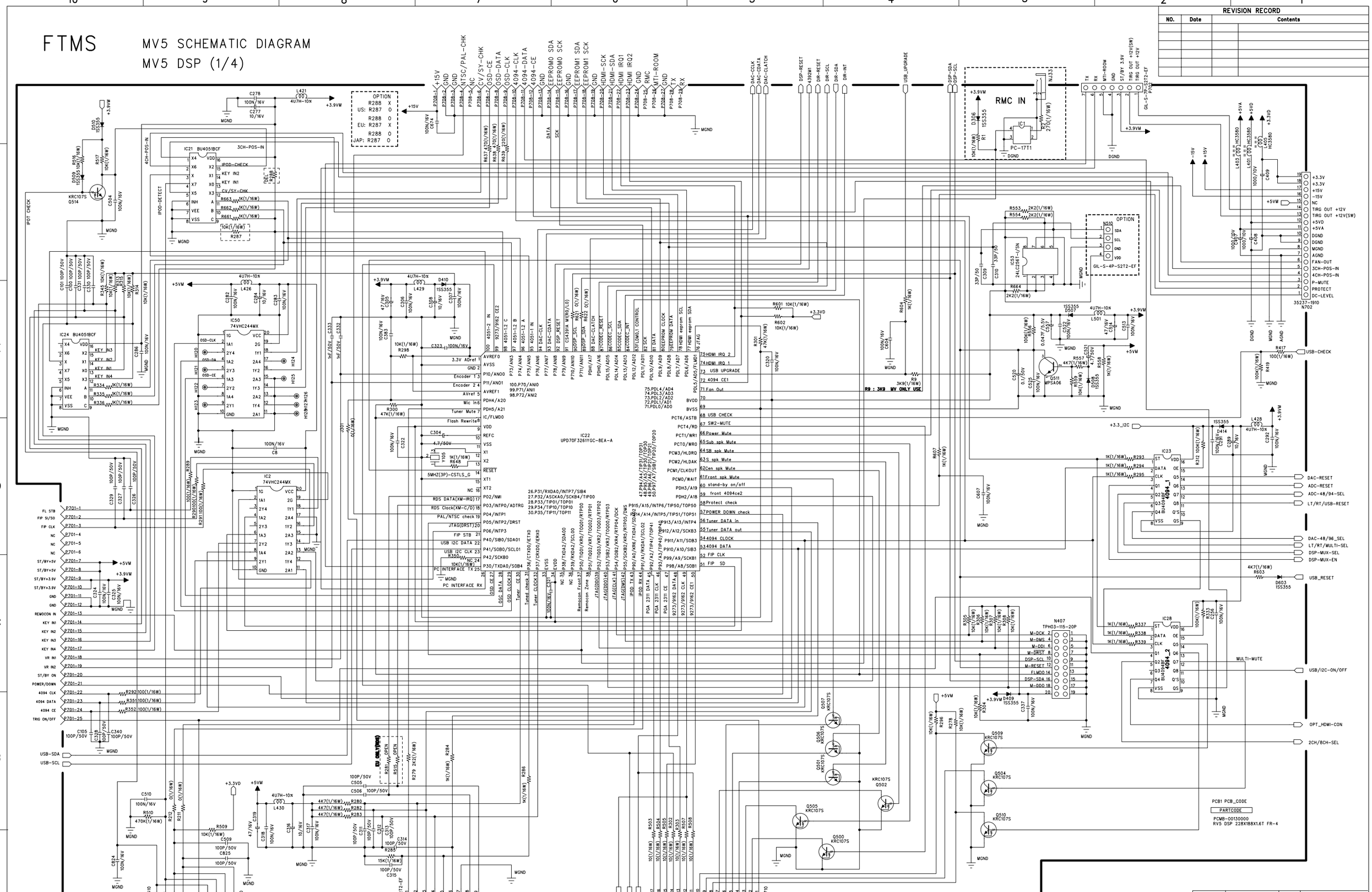

REVISION RECORD		
NO.	Date	Contents

Category	AV RECEIVER	Model	RV5
Stage	Ver.	Sheet	B'D name
FTMS		1 / 4	DSP
Draw	Approved	Date	Drawing No
KO. H.J		15.Jan.2007	

DANECH COMPANY LTD.

FTMS

MV5 SCHEMATIC DIAGRAM

MV5 DSP B'D (2/4)

REVISION RECORD			
NO.	Date	Contents	

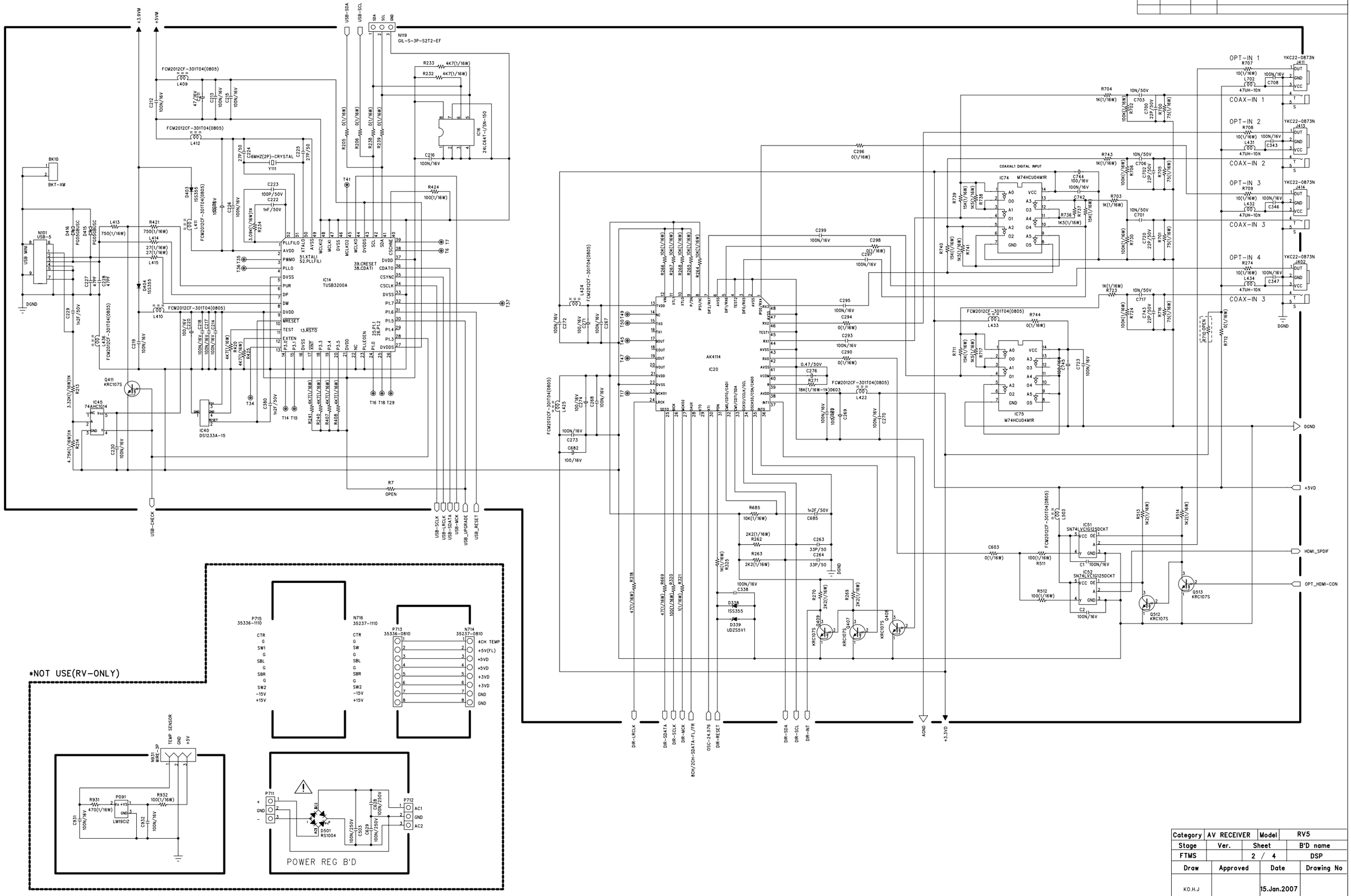

Category	AV RECEIVER	Model	RV5
Stage	Ver.	Sheet	B'D name
FTMS		2 / 4	DSP
Draw	Approved	Date	Drawing No
KO.H.J		15.Jan.2007	

DANECH COMPANY LTD.

MV5 SCHEMATIC DIAGRAM

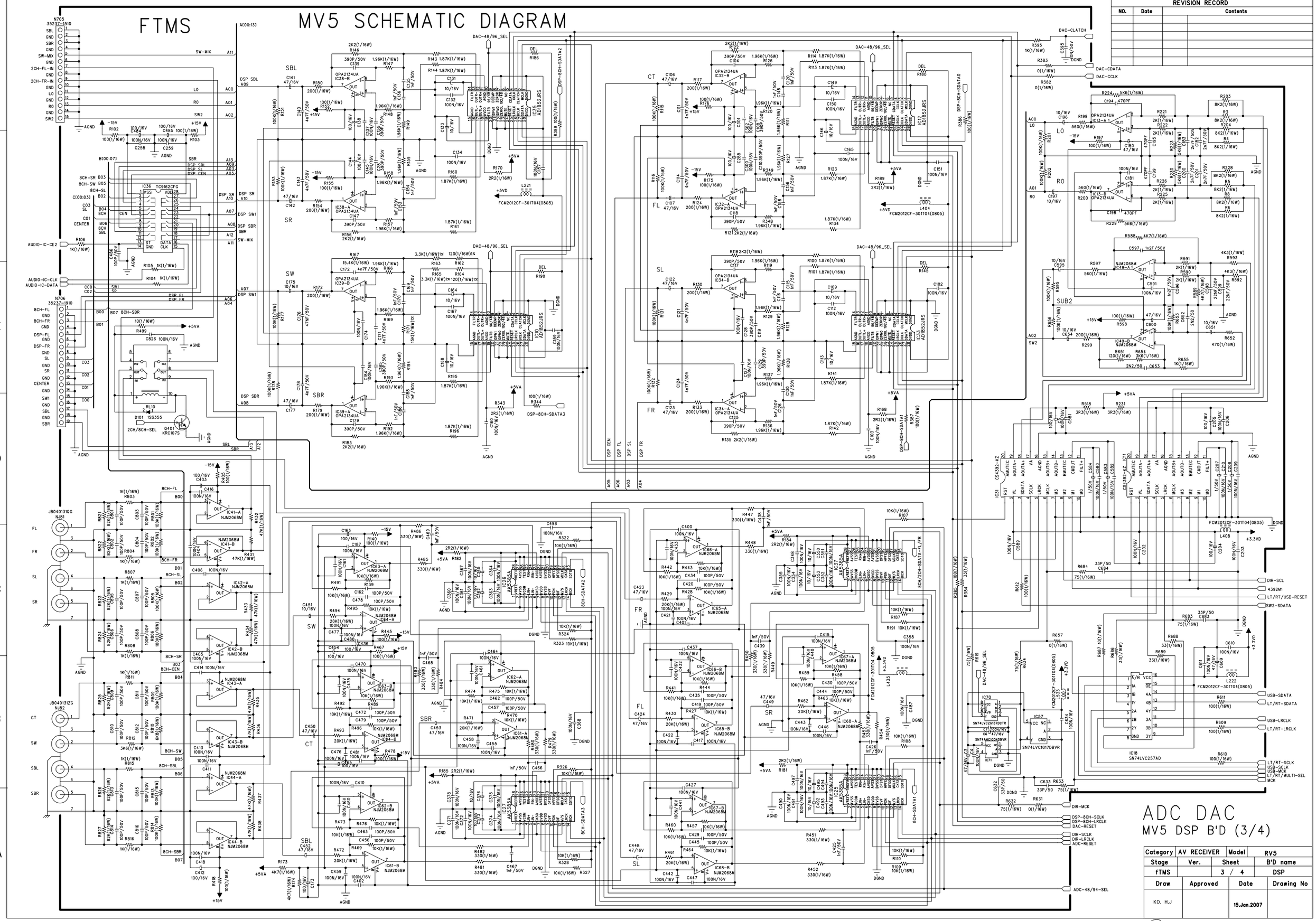

REVISION RECORD		
NO.	Date	Contents

ADC DAC

MV5 DSP B'D (3/4)

Category	AV RECEIVER	Model	RV5
Stage	Ver.	Sheet	B'D name
fTMS		3 / 4	DSP
Draw	Approved	Date	Drawing No
KO. H.J		15.Jan.2007	

DANECH COMPANY LTD.

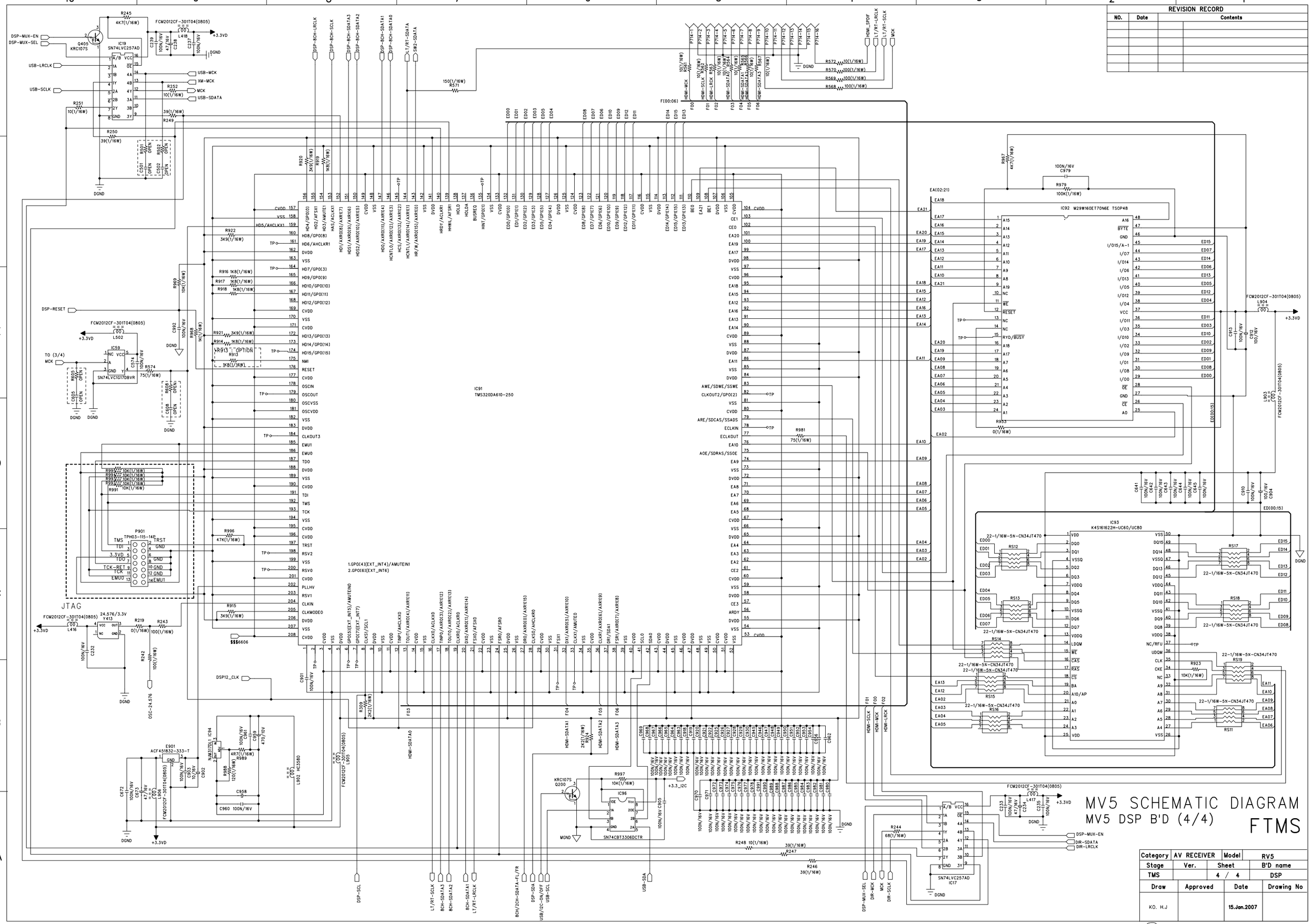

REVISION RECORD		
NO.	Date	Contents

MV5 SCHEMATIC DIAGRAM

MV5 DSP B'D (4/4)

FTMS

Category	AV RECEIVER	Model	RV5
Stage	Ver.	Sheet	B'D name
TMS		4 / 4	DSP
Draw	Approved	Date	Drawing No
KO. H.J		15.Jan.2007	

DANECH COMPANY LTD.

Schematic Diagram

Lexicon
MV-5 VIDEO

REVISION RECORD		
NO.	Date	Contents

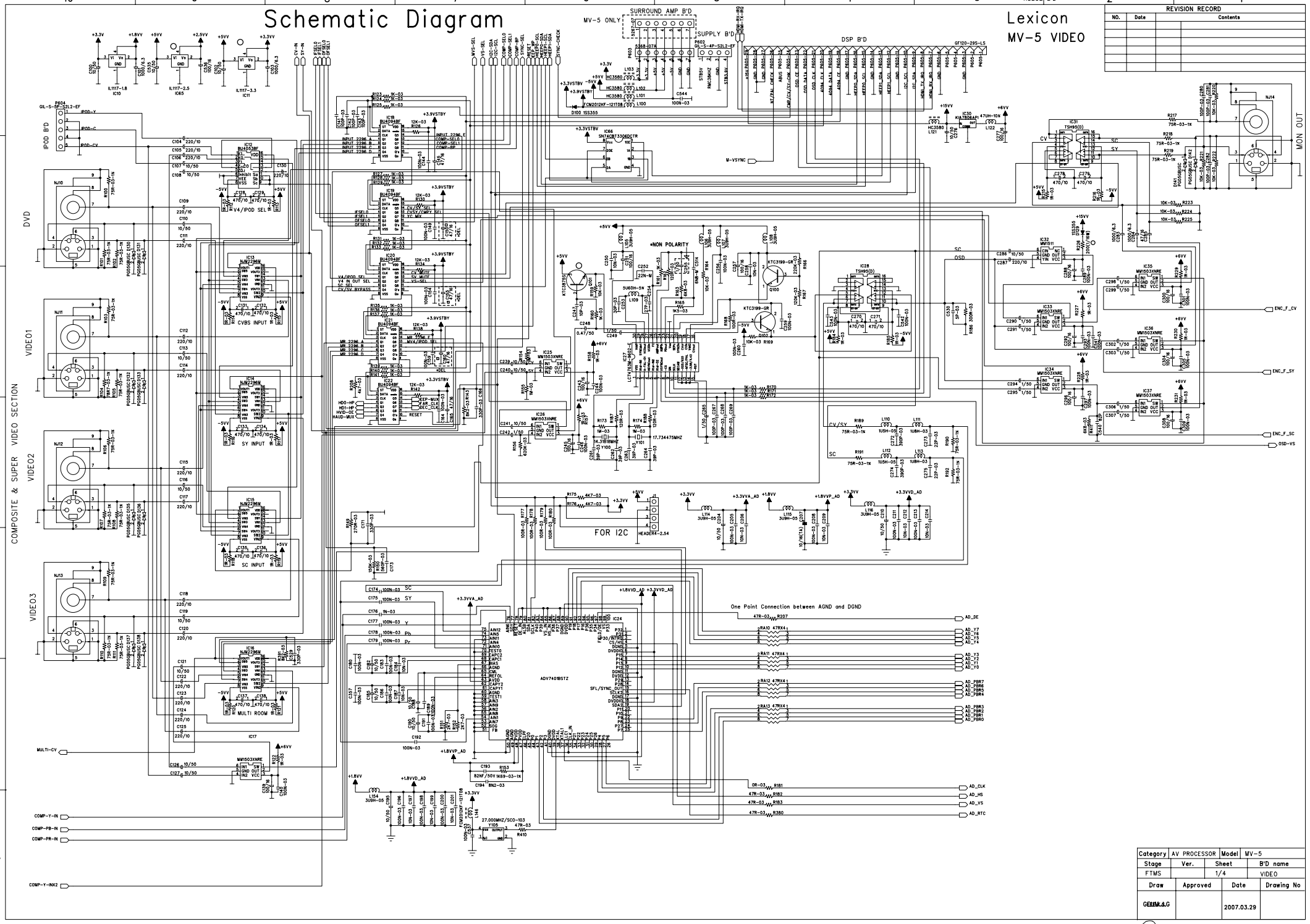

Category	AV PROCESSOR	Model	MV-5
Stage	Ver.	Sheet	B'D name
FTMS		1/4	VIDEO
Draw	Approved	Date	Drawing No
GENK&G		2007.03.29	

DANECH COMPANY LTD.

Schematic Diagram

Lexicon
MV5 VIDEO

REVISION RECORD		
NO.	Date	Contents

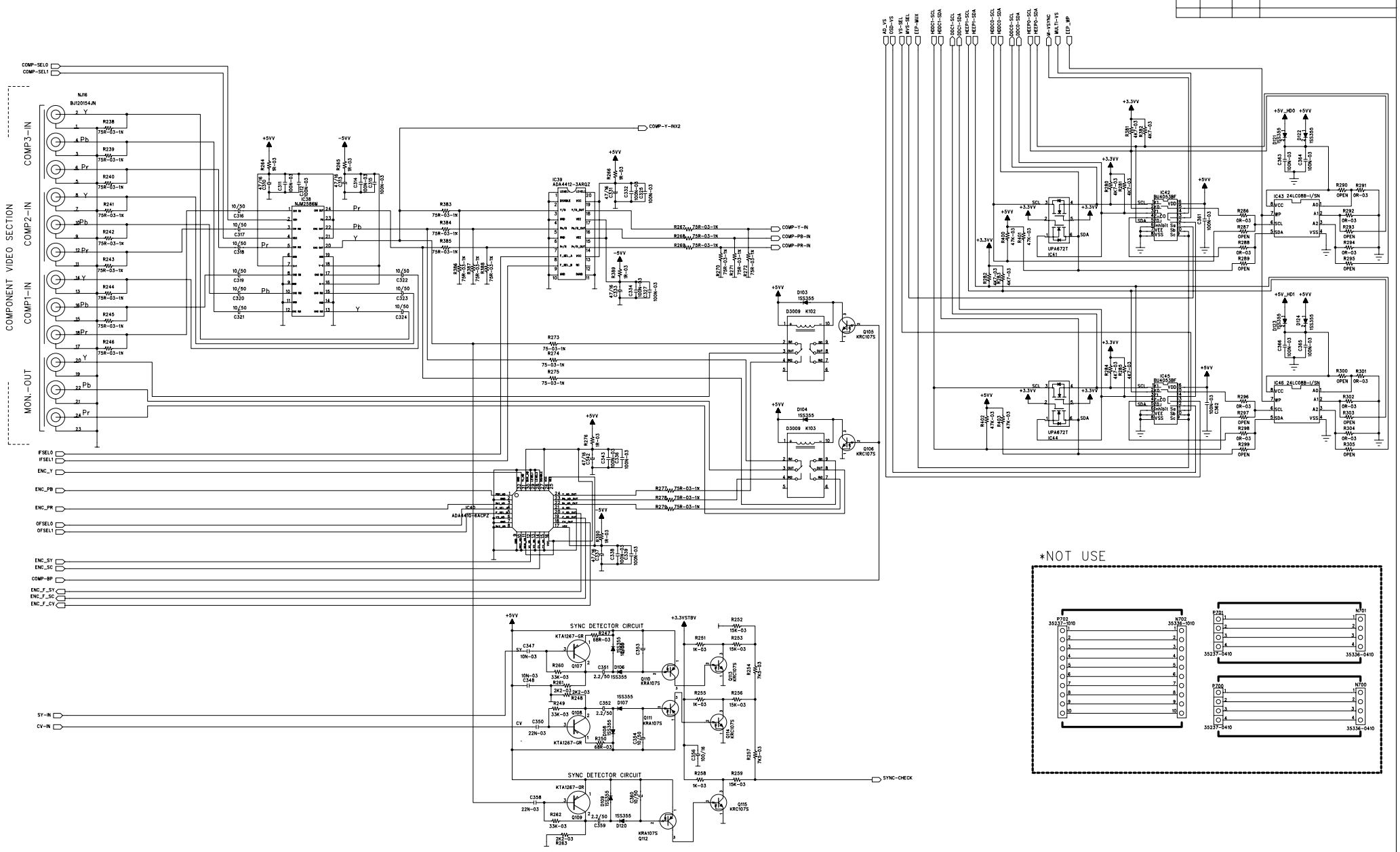

Category	AV PROCESSOR	Model	MV-5
Stage	Ver.	Sheet	B'D name
FTMS		2/4	VIDEO
Draw	Approved	Date	Drawing No
GEUM.J.G		2007.03.29	

DANECH COMPANY LTD.

Schematic Diagram

Lexicon
RV5 VIDEO

REVISION RECORD		
NO.	Date	Contents

Category	AV PROCESSOR	Model	MV-5
Stage	Ver.	Sheet	B'D name
FTMS		3/4	VIDEO
Draw	Approved	Date	Drawing No
GEUM.J.G		2007.03.29	

DANECH COMPANY LTD.

Schematic Diagram

Lexicon
RV5 VIDEO

REVISION RECORD		
NO.	Date	Contents

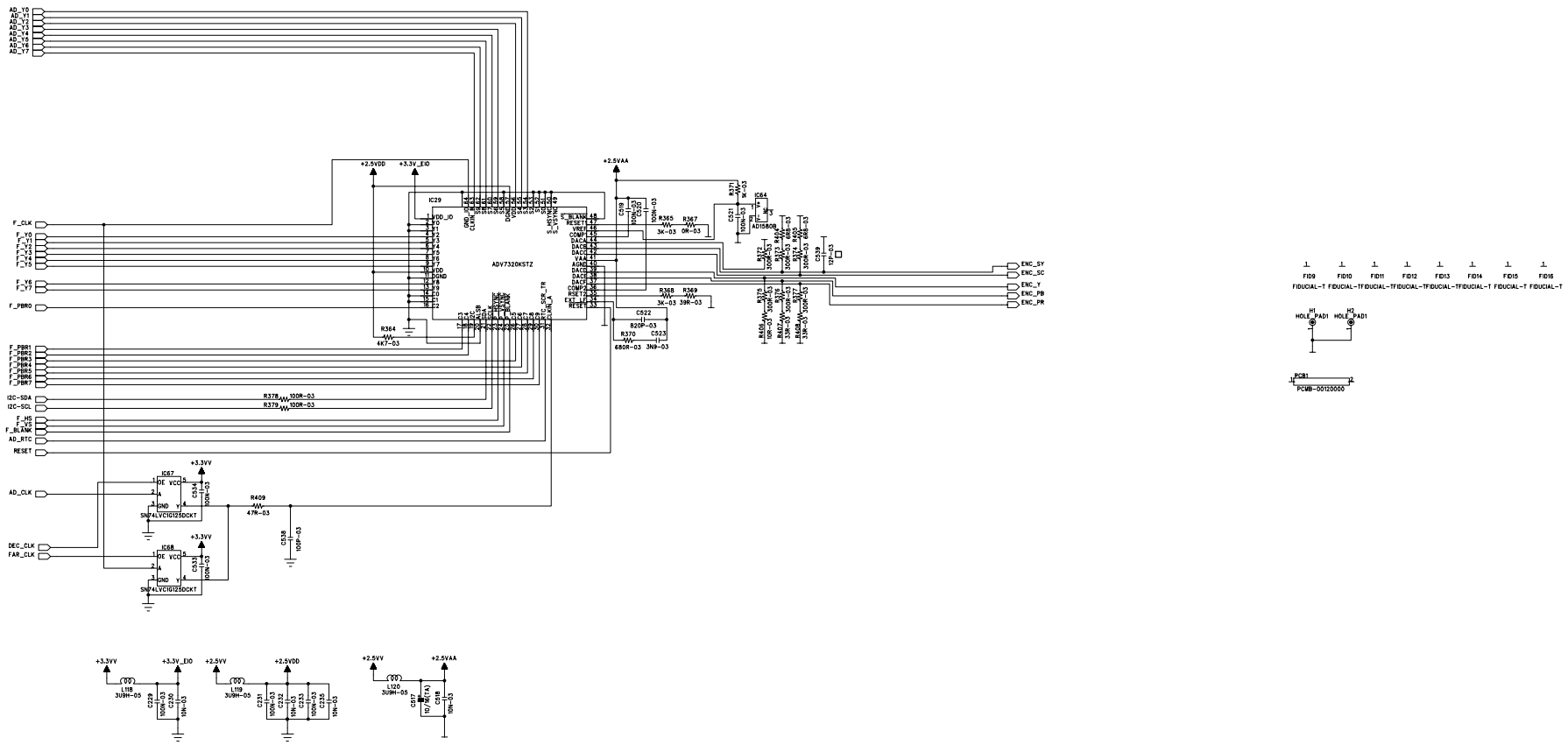

Category	AV PROCESSOR	Model	MV-5
Stage	Ver.	Sheet	B'D name
FTMS		4/4	VIDEO
Draw	Approved	Date	Drawing No
GEUM.J.G		2007.03.29	

DANECH COMPANY LTD.

POWER SUPPLY SCHEMATIC DIAGRAM

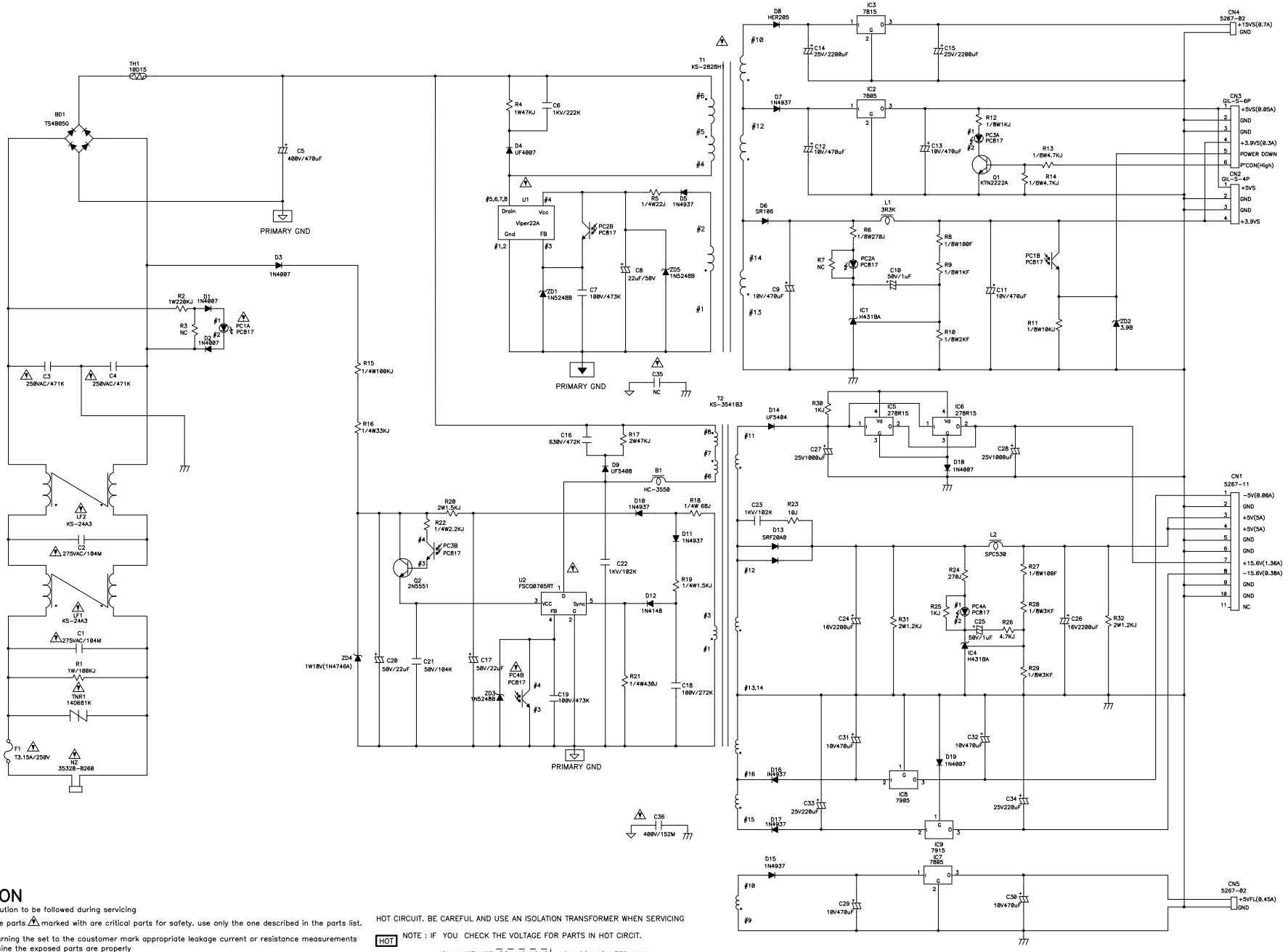

CAUTION

Safety precaution to be followed during servicing

1)Since those parts ⚠ marked with are critical parts for safety. use only the one described in the parts list.

2) Befor returning the set to the coustomer mark appropriate leakage current or resistance measurements to determine the exposed parts are properly insulated from the supply circuit.

HOT CIRCUIT. BE CAREFUL AND USE AN ISOLATION TRANSFORMER WHEN SERVICING

HOT NOTE : IF YOU CHECK THE VOLTAGE FOR PARTS IN HOT CIRCIT.

YOU MUST USE PRIMARY GND AS A COMMON TERMINAL.

TITLE	MV-5	MODEL	KSP1B4F-1110008-0
NAME		DRAW NO	REV-A
		DATE	2007.03.12

DRAWN	CHECKED	APPROVED	KWANG SUNG ELECTRONIC CO.,LTD
			108,4-GA,WONHYO-RO,YONGSAN-GU,140-114,KOREA
			TEL : 82-2-711-2001/2005 FAX : 82-2-711-8910