AVR645 BLOCK DIAGRAM

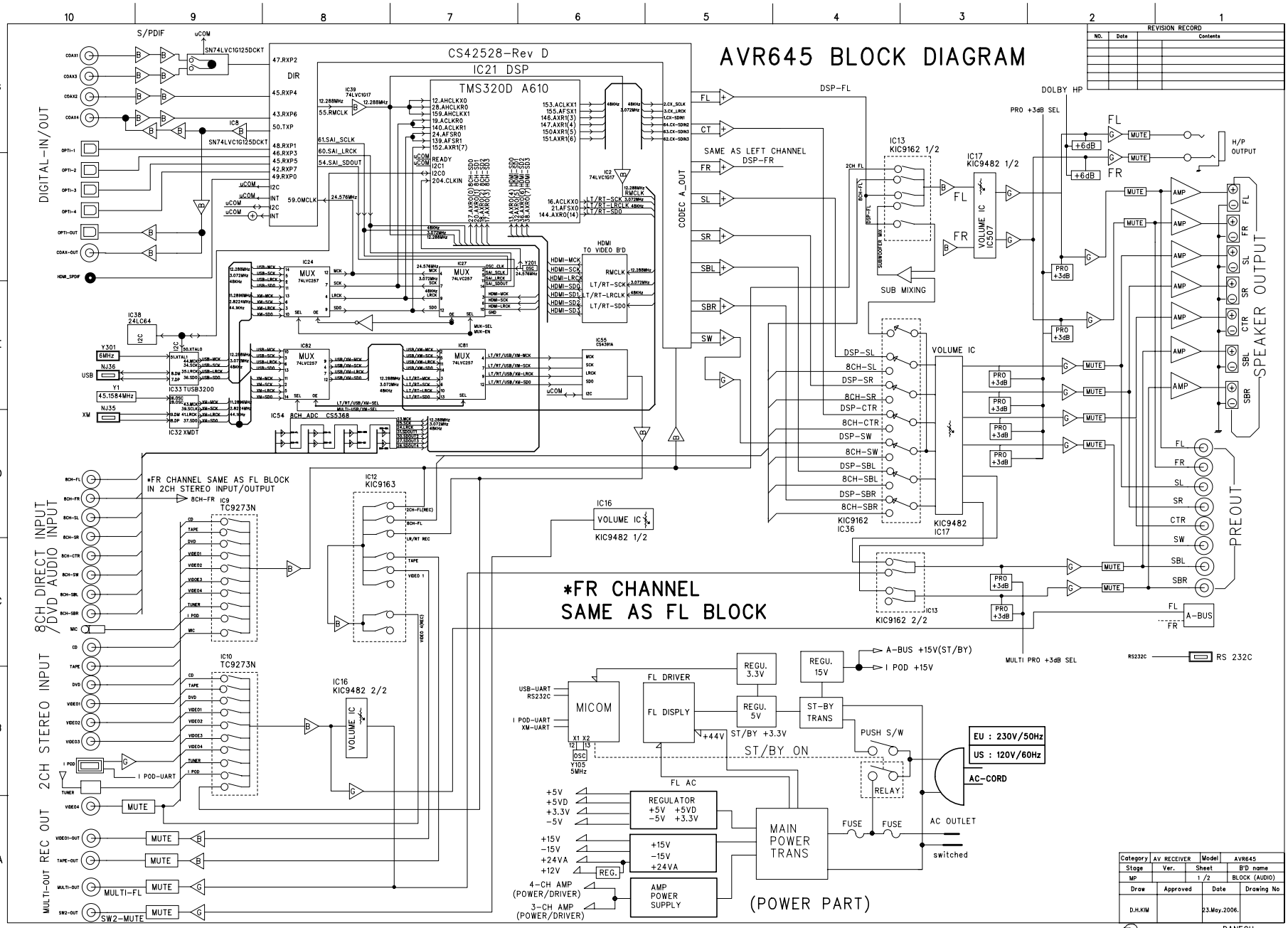

REVISION RECORD		
NO.	Date	Contents

Category	AV RECEIVER	Model	AVR645
Stage	Ver.	Sheet	B'D name
MP		1 /2	BLOCK (AUDIO)
Draw	Approved	Date	Drawing No
D.H.KIM		23.May.2006.	

DANECH COMPANY LTD.

AVR645 VIDEO BLOCK DIAGRAM

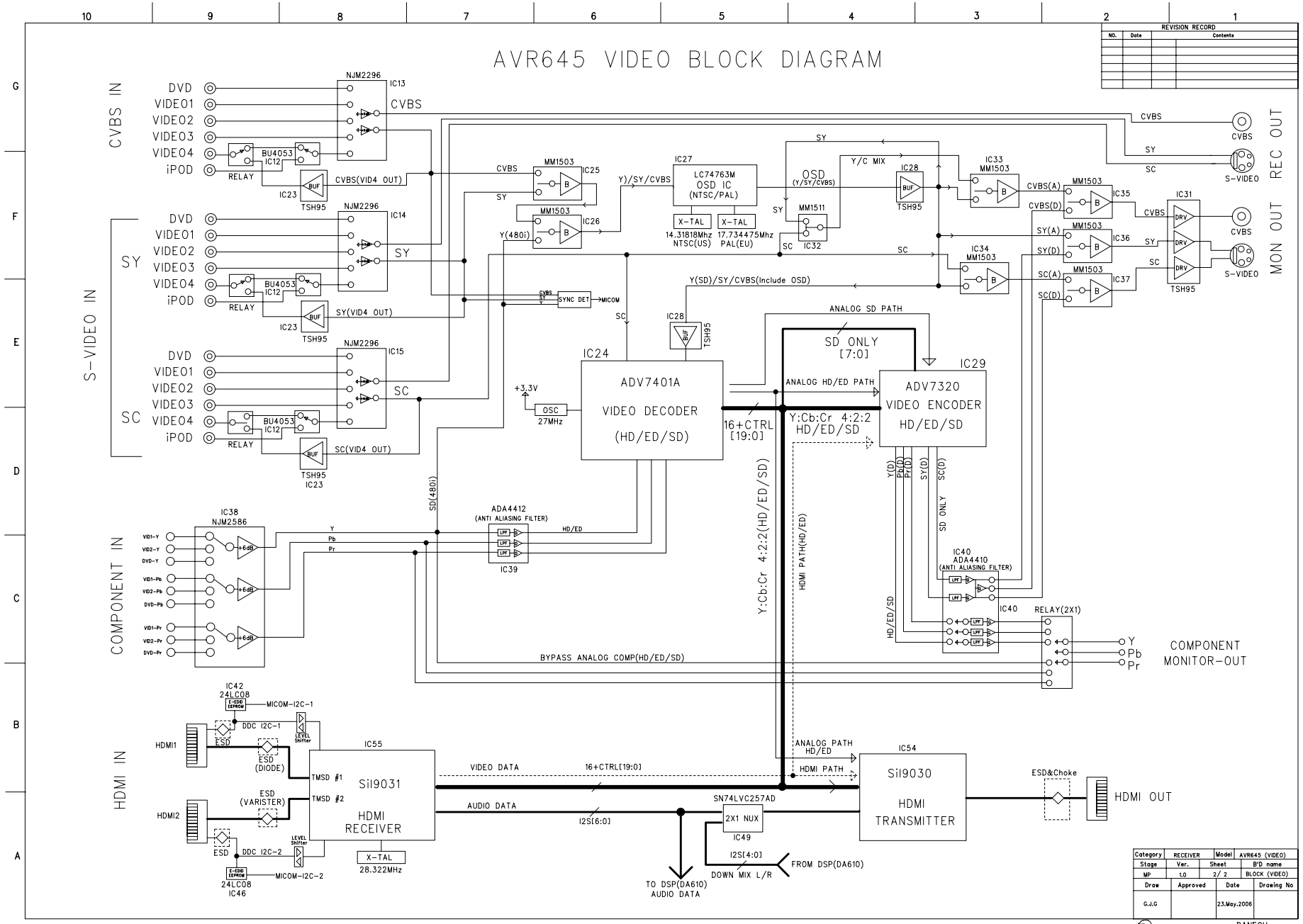

REVISION RECORD		
NO.	Date	Contents

Category	RECEIVER	Model	AVR645 (VIDEO)
Stage	Ver.	Sheet	B'D name
MP	1.0	2/ 2	BLOCK (VIDEO)
Draw	Approved	Date	Drawing No
G.J.G		23.May.2006	

DANECH COMPANY LTD.

AVR745/645/445 WIRING DIAGRAM

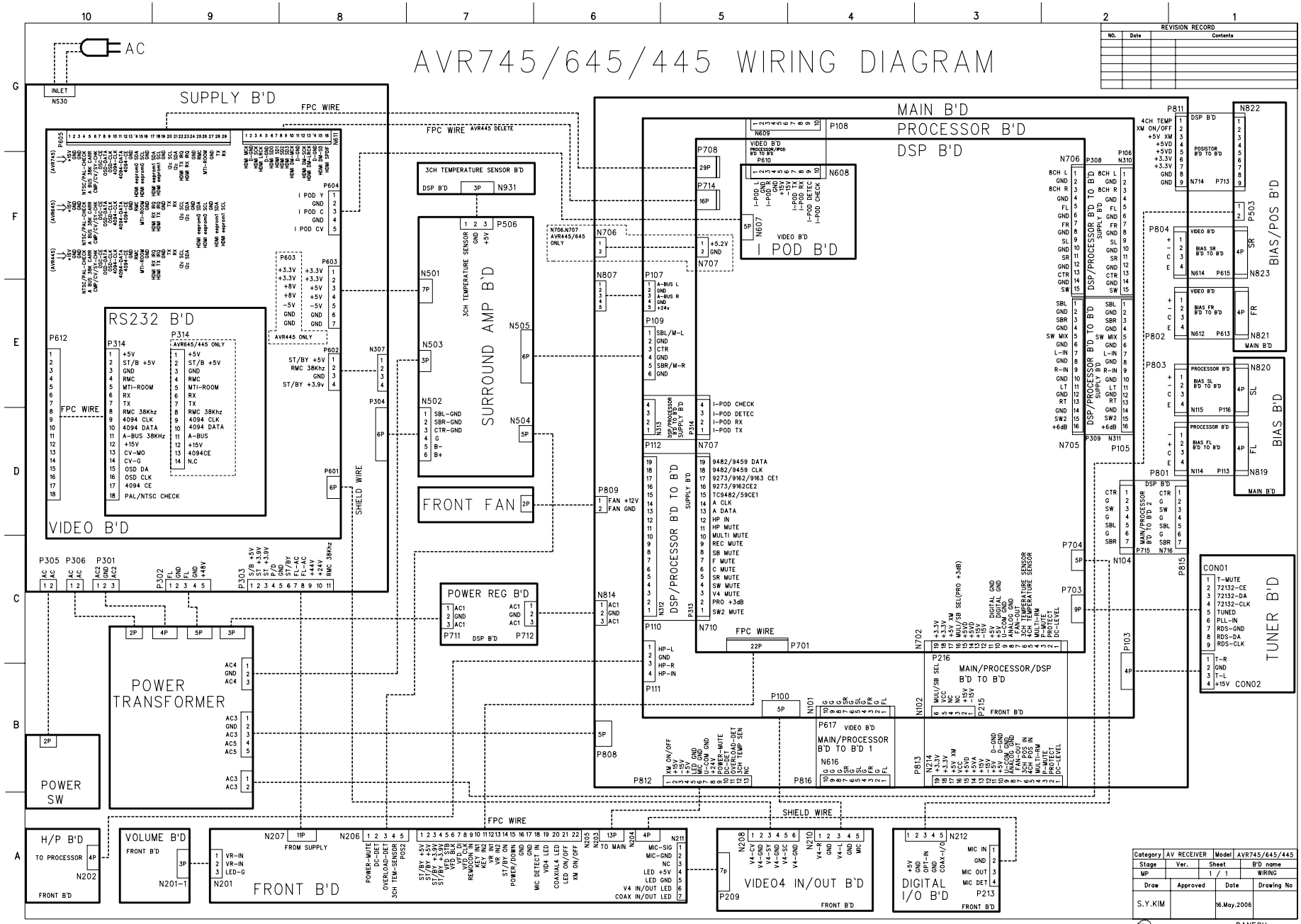

REVISION RECORD		
NO.	Date	Contents

Category	AV RECEIVER	Model	AVR745/645/445
Stage	Ver.	Sheet	B'D name
MP		1 / 1	WIRING
Draw	Approved	Date	Drawing No
S.Y.KIM		16.May.2006	

DANECH COMPANY LTD.