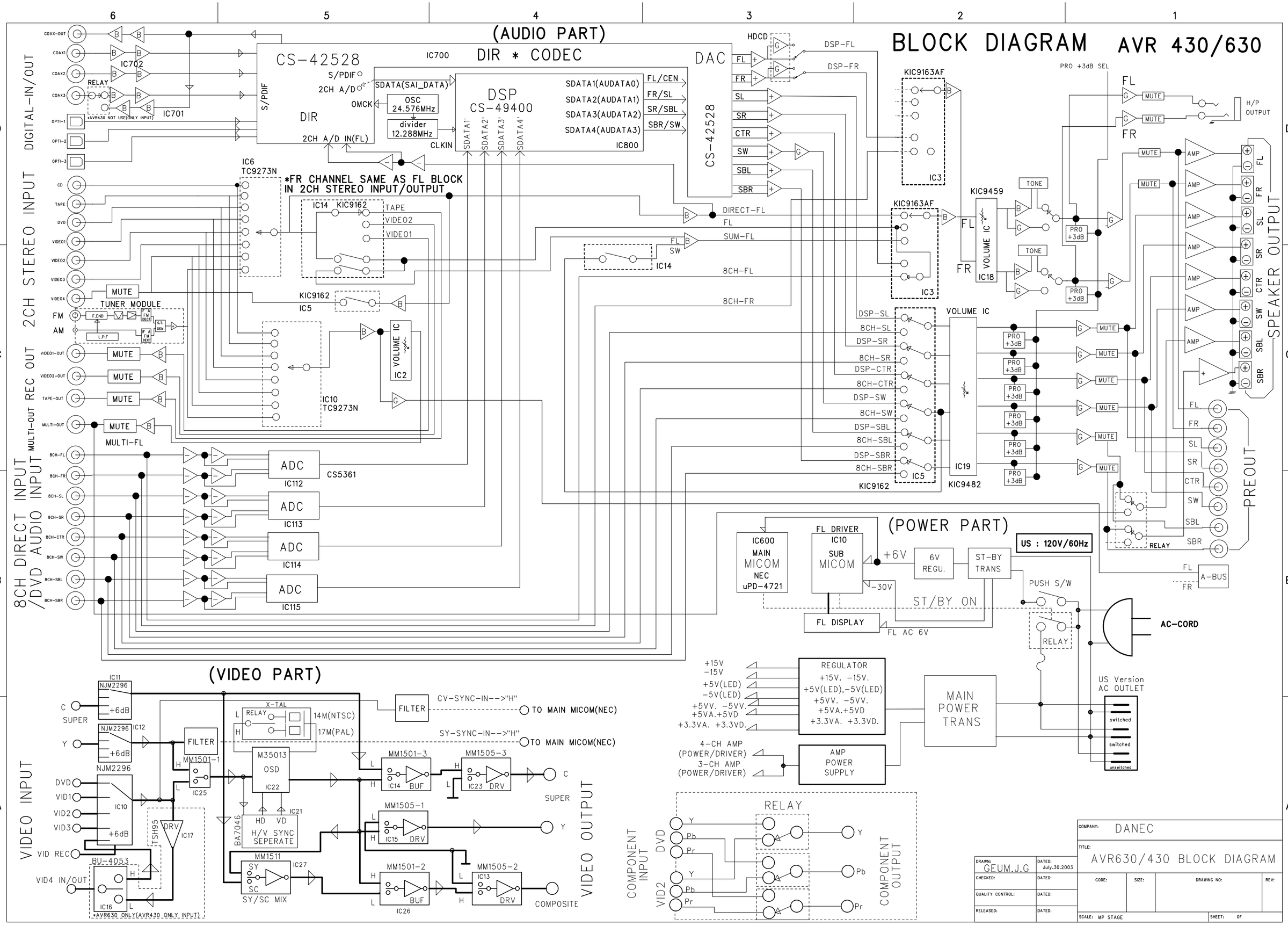
BLOCK DIAGRAM AVR 430/630
(AUDIO PART)
DIGITAL-IN/OUT
2CH STEREO INPUT
REC OUT
MULTI-OUT
8CH DIRECT INPUT
/DVD AUDIO INPUT
CS-42528
DIR * CODEC
IC700
DIR
S/PDIF
2CH A/D IN(FL)
SDATA(SAI_DATA)
OMCK
OSC 24.576MHz
divider 12.288MHz
CLKIN
DSP CS-49400
SDATA1(AUDATA0)
SDATA2(AUDATA1)
SDATA3(AUDATA2)
SDATA4(AUDATA3)
IC800
FL/CEN
FR/SL
SR/SBL
SBR/SW
DAC
CS-42528
HDCD
DSP-FL
DSP-FR
IC702
IC701
RELAY
IC6 TC9273N
*FR CHANNEL SAME AS FL BLOCK IN 2CH STEREO INPUT/OUTPUT
IC14 KIC9162
TAPE
VIDEO2
VIDEO1
KIC9162 IC5
TUNER MODULE
MULTI-FL
IC10 TC9273N
VOLUME IC IC2
ADC CS5361 IC112
ADC IC113
ADC IC114
ADC IC115
DIRECT-FL
SUM-FL
8CH-FL
8CH-FR
KIC9163AF IC3
KIC9459
VOLUME IC IC18
TONE
PRO +3dB
PRO +3dB SEL
MUTE
H/P OUTPUT
AMP
SPEAKER OUTPUT
DSP-SL
8CH-SL
DSP-SR
8CH-SR
DSP-CTR
8CH-CTR
DSP-SW
8CH-SW
DSP-SBL
8CH-SBL
DSP-SBR
8CH-SBR
KIC9162 IC5
VOLUME IC IC19
KIC9482
PREOUT
A-BUS
(POWER PART)
US : 120V/60Hz
IC600 MAIN MICOM NEC uPD-4721
FL DRIVER IC10 SUB MICOM
+6V
6V REGU.
ST-BY TRANS
-30V
ST/BY ON
FL DISPLAY
FL AC 6V
PUSH S/W
RELAY
AC-CORD
REGULATOR +15V. -15V. +5V(LED),-5V(LED) +5VV. -5VV. +5VA.+5VD +3.3VA. +3.3VD.
+15V -15V +5V(LED) -5V(LED) +5VV. -5VV. +5VA.+5VD +3.3VA. +3.3VD.
4-CH AMP (POWER/DRIVER) 3-CH AMP (POWER/DRIVER)
AMP POWER SUPPLY
MAIN POWER TRANS
US Version AC OUTLET
switched
switched
unswitched
(VIDEO PART)
VIDEO INPUT
SUPER
NJM2296 IC11 +6dB
NJM2296 IC12 +6dB
NJM2296 IC10 +6dB
DVD
VID1
VID2
VID3
VID REC
VID4 IN/OUT
BU-4053 IC16
*AVR630 ONLY(AVR430 ONLY INPUT)
TSH95 DRV IC17
FILTER
MM1501-1 IC25
X-TAL
RELAY
14M(NTSC)
17M(PAL)
M35013 OSD IC22
BA7046
HD VD
H/V SYNC SEPERATE IC21
MM1511 IC27
SY/SC MIX
CV-SYNC-IN-->"H"
SY-SYNC-IN-->"H"
TO MAIN MICOM(NEC)
MM1501-3 IC14 BUF
MM1505-3 IC23 DRV
MM1505-1 IC15 DRV
MM1501-2 IC26 BUF
MM1505-2 IC13 DRV
VIDEO OUTPUT
COMPONENT INPUT
DVD
VID2
Y
Pb
Pr
RELAY
COMPONENT OUTPUT
COMPANY: DANEC
TITLE: AVR630/430 BLOCK DIAGRAM
DRAWN: GEUM.J.G
DATED: July.30.2003
CHECKED:
QUALITY CONTROL:
RELEASED:
CODE:
SIZE:
DRAWING NO:
REV:
SCALE: MP STAGE
SHEET: OF

AVR630 DSP BLOCK DIAGRAM

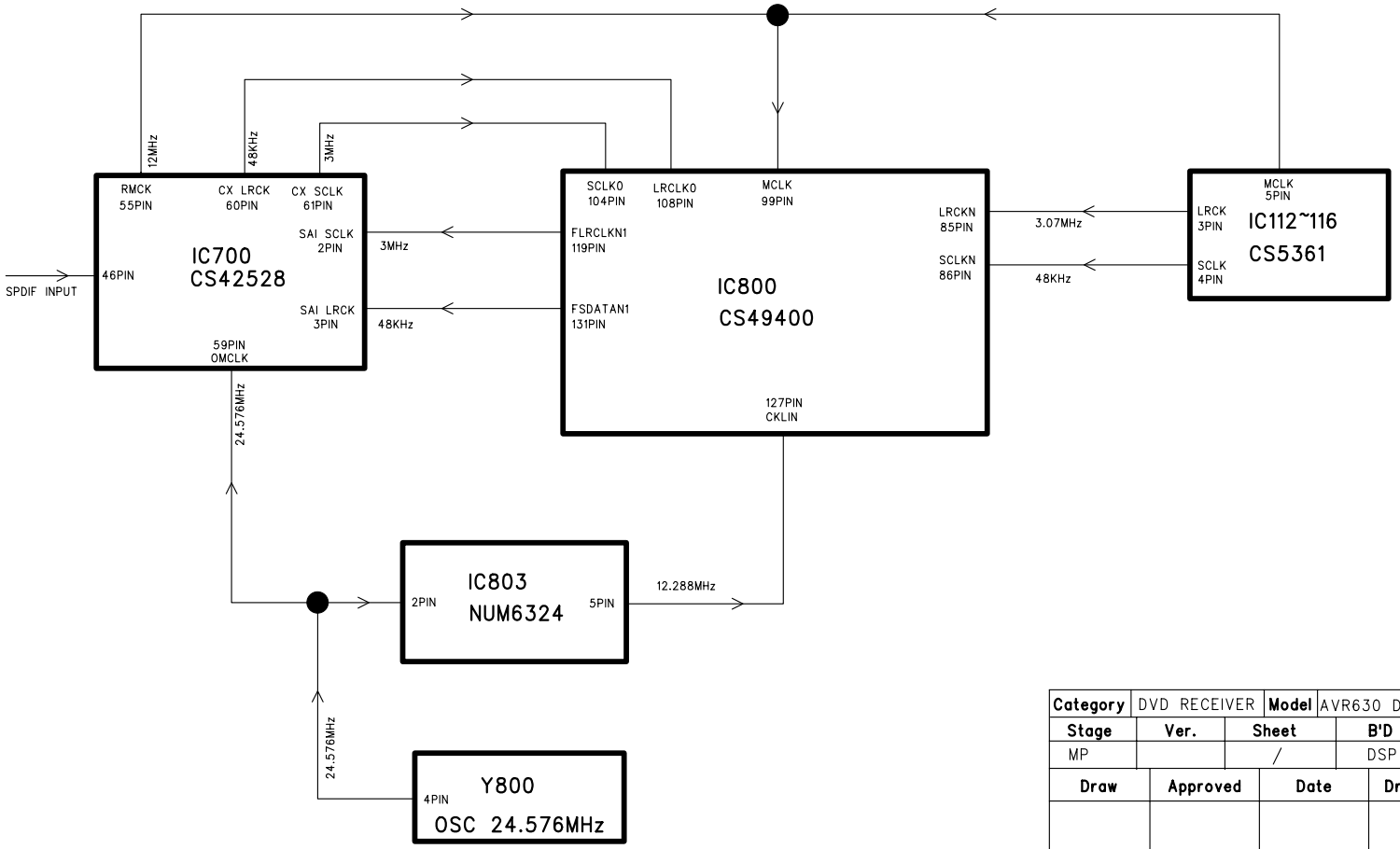

REVISION RECORD			
NO.	Date	Contents	

Category	DVD RECEIVER	Model	AVR630 DSP BLOCK
Stage	Ver.	Sheet	B'D name
MP		/	DSP
Draw	Approved	Date	Drawing No

DANECH COMPANY LTD.

H/K AVR430/630 WIRING DIAGRAM

REVISION RECORD			
LTR	ECO NO:	APPROVED	DATE:

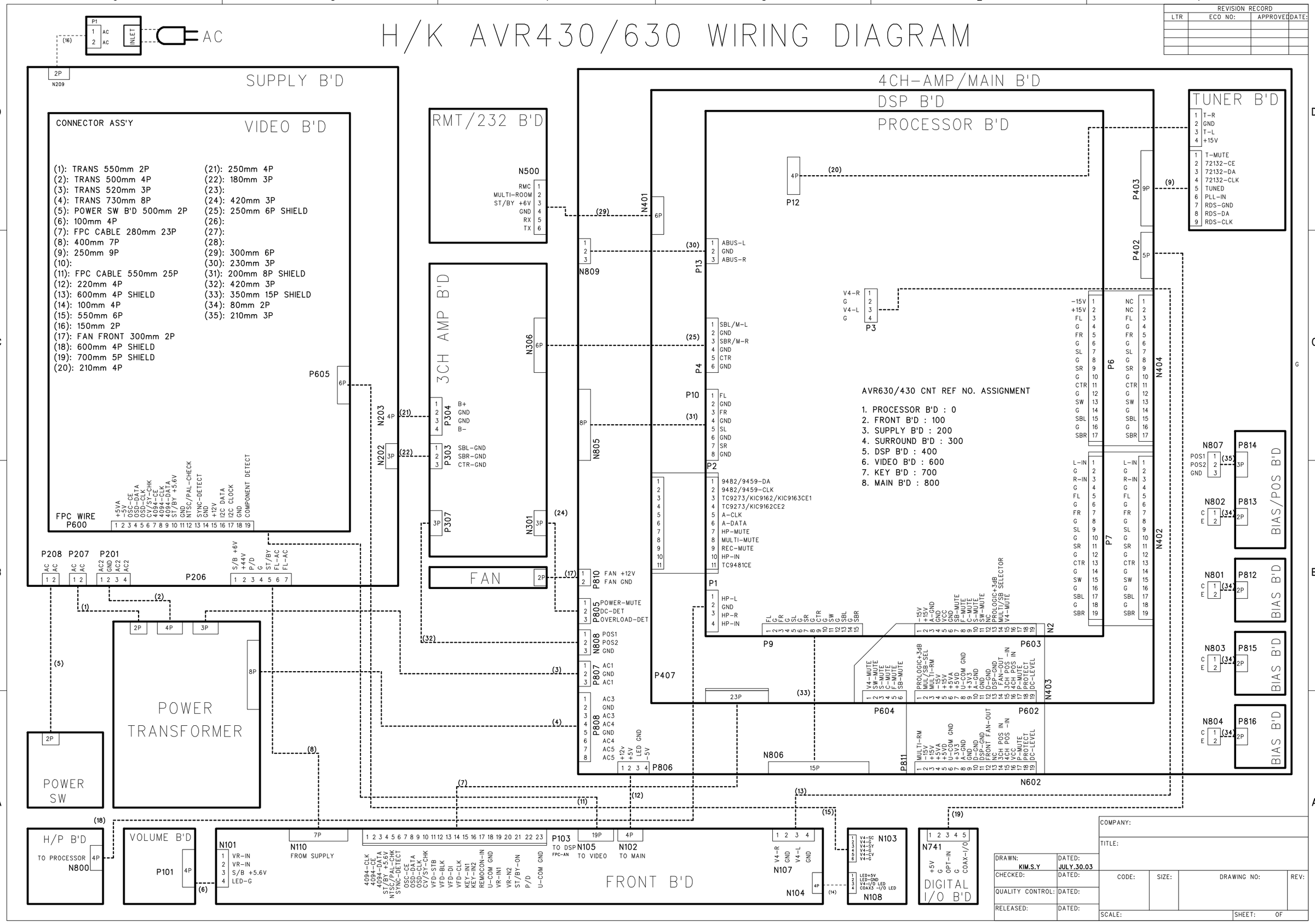

COMPANY:			
TITLE:			
DRAWN: KIM.S.Y	DATED: JULY.30.03		
CHECKED:	DATED:	CODE:	SIZE: DRAWING NO: REV:
QUALITY CONTROL:	DATED:		
RELEASED:	DATED:	SCALE:	SHEET: OF