Schematic Diagram

AA/JBL
AVR21EN/ER600 FRONT

REVISION RECORD		
NO.	Date	Contents

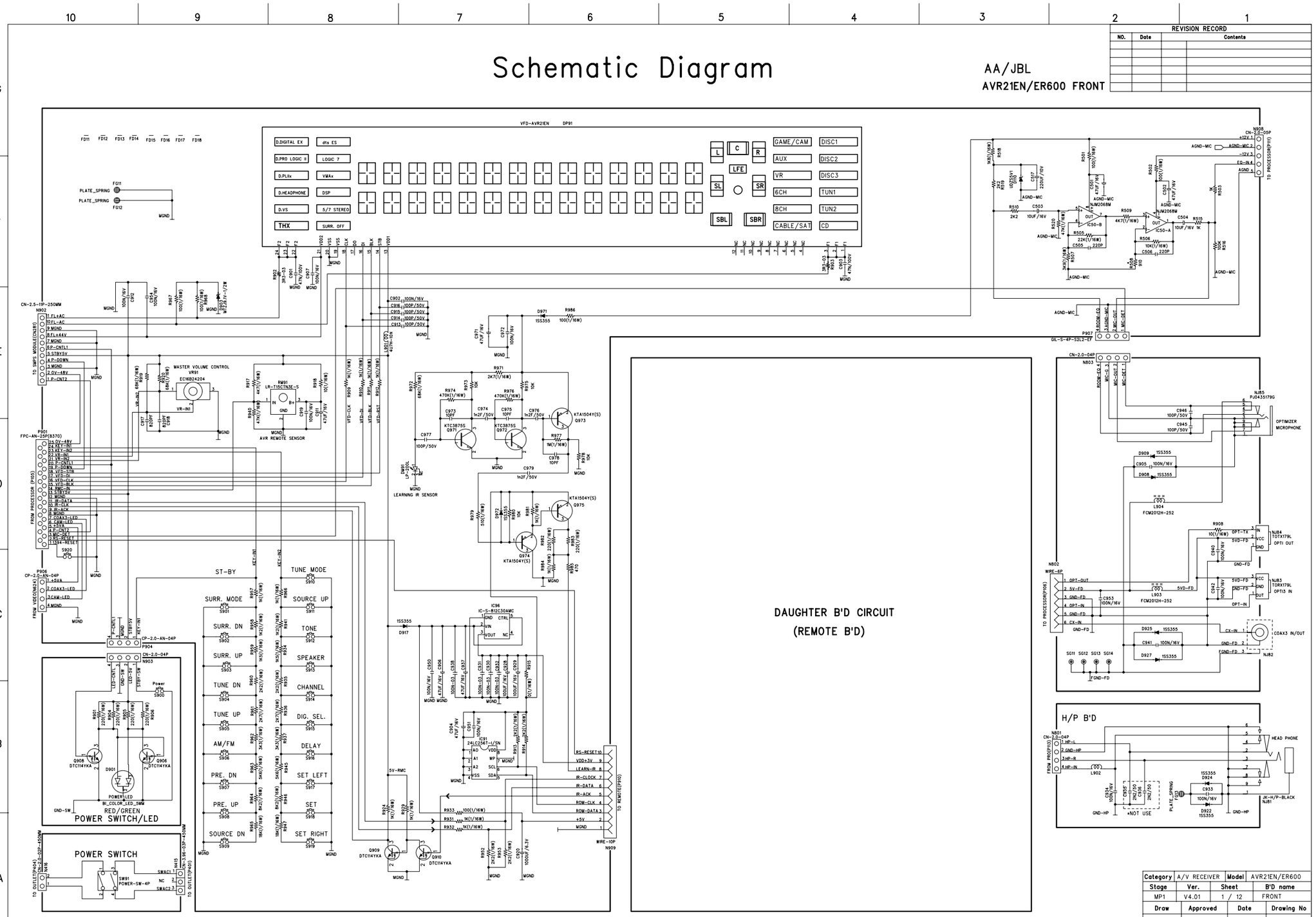

Category	A/V RECEIVER	Model	AVR21EN/ER600
Stage	Ver.	Sheet	B'D name
MP1	V4.01	1 / 12	FRONT
Draw	Approved	Date	Drawing No
		SEP.05.2006	

DANECH COMPANY LTD.

Schematic Diagram

AA/JBL
AVR21EN/ER600 Processor1

REVISION RECORD		
NO.	Date	Contents

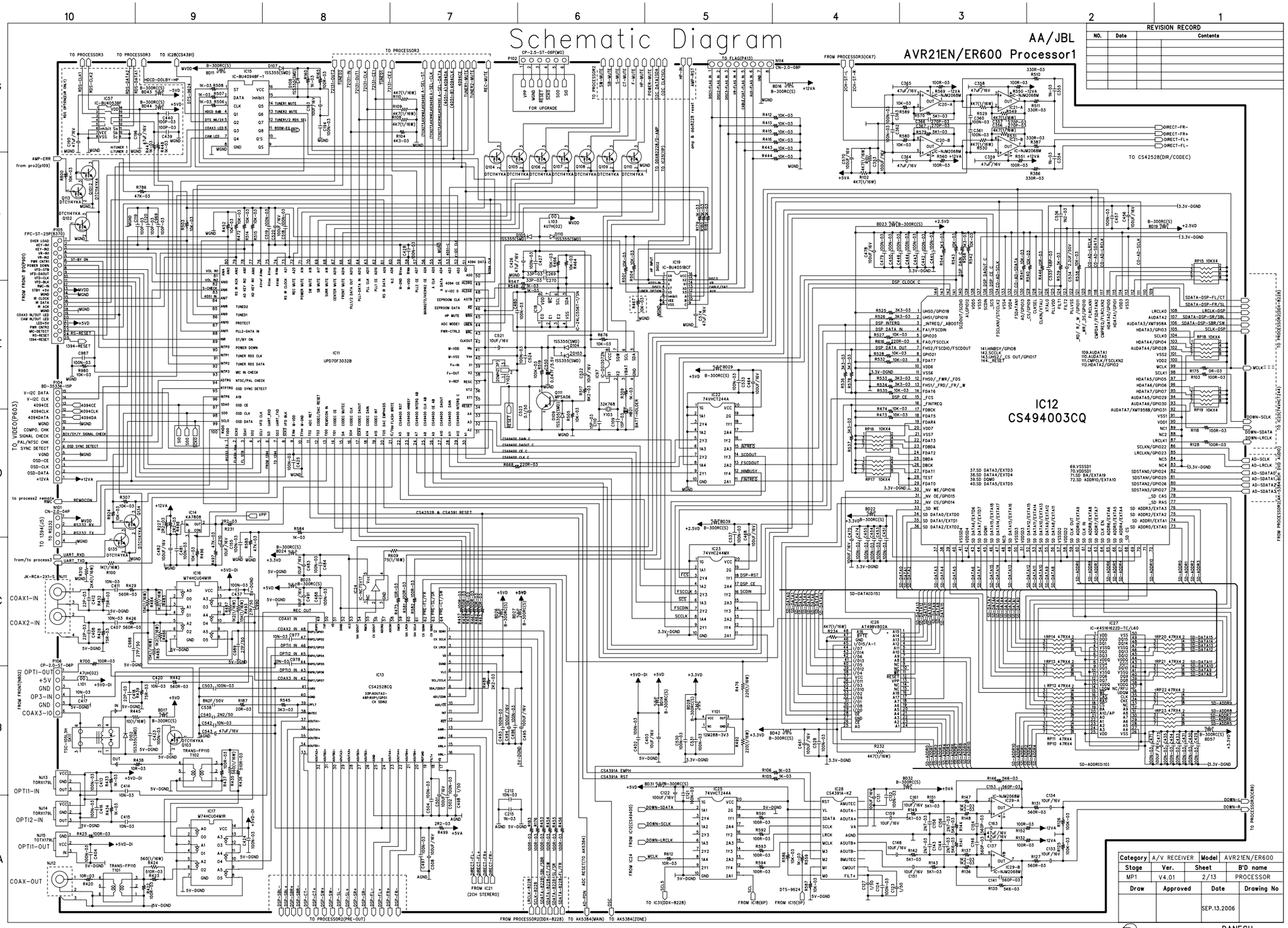

Category	A/V RECEIVER	Model	AVR21EN/ER600
Stage	Ver.	Sheet	B'D name
MP1	V4.01	2/13	PROCESSOR
Draw	Approved	Date	Drawing No
		SEP.13.2006	

DANECH COMPANY LTD.

Schematic Diagram

AA/JBL

AVR21EN/ER600 Processor2

REVISION RECORD		
NO.	Date	Contents

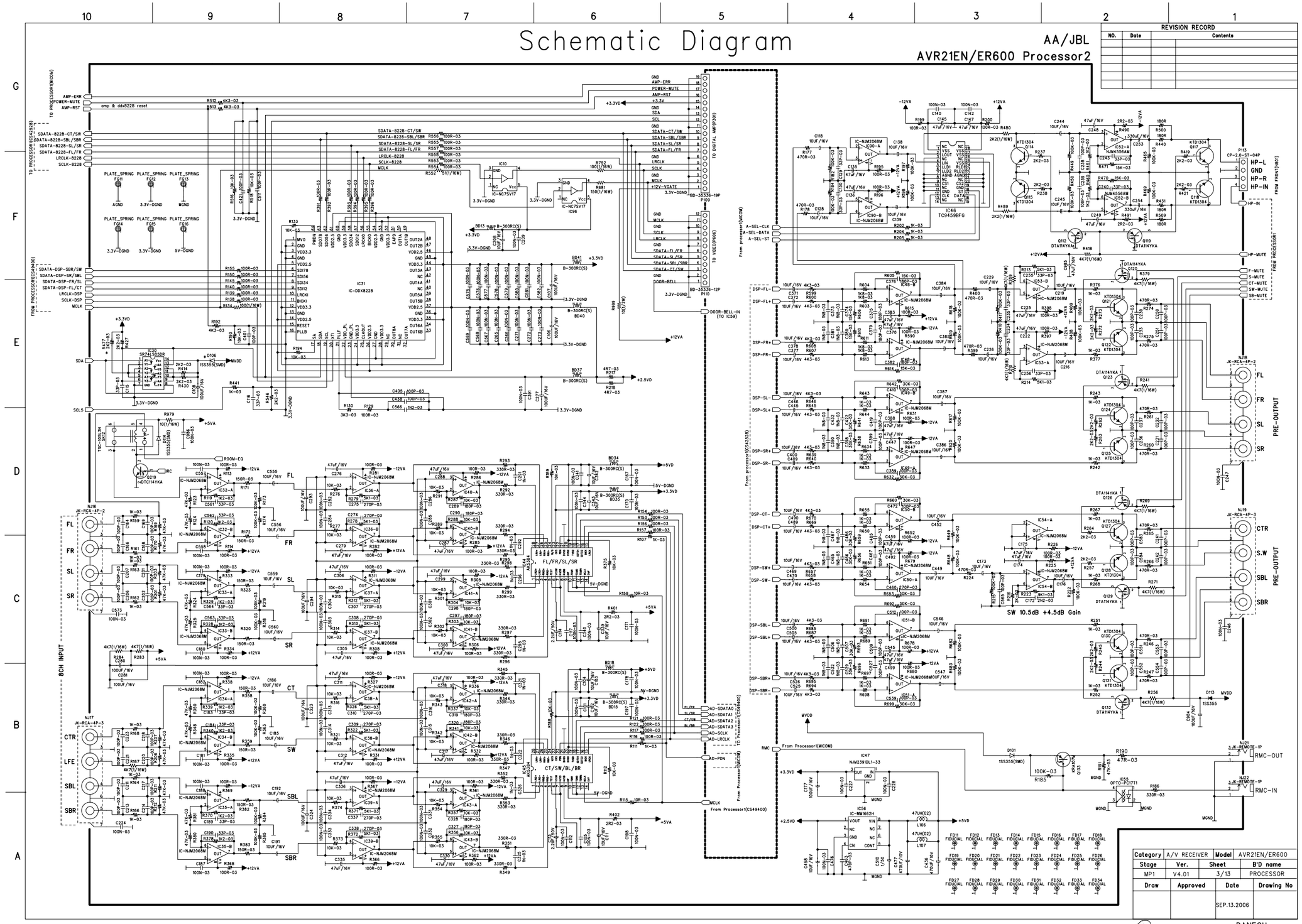

Category	A/V RECEIVER	Model	AVR21EN/ER600
Stage	Ver.	Sheet	B'D name
MP1	V4.01	3/13	PROCESSOR
Draw	Approved	Date	Drawing No
		SEP.13.2006	

DANECH COMPANY LTD.

Schematic Diagram

AA/JBL

AVR21EN/ER600 Processor3

REVISION RECORD		
NO.	Date	Contents

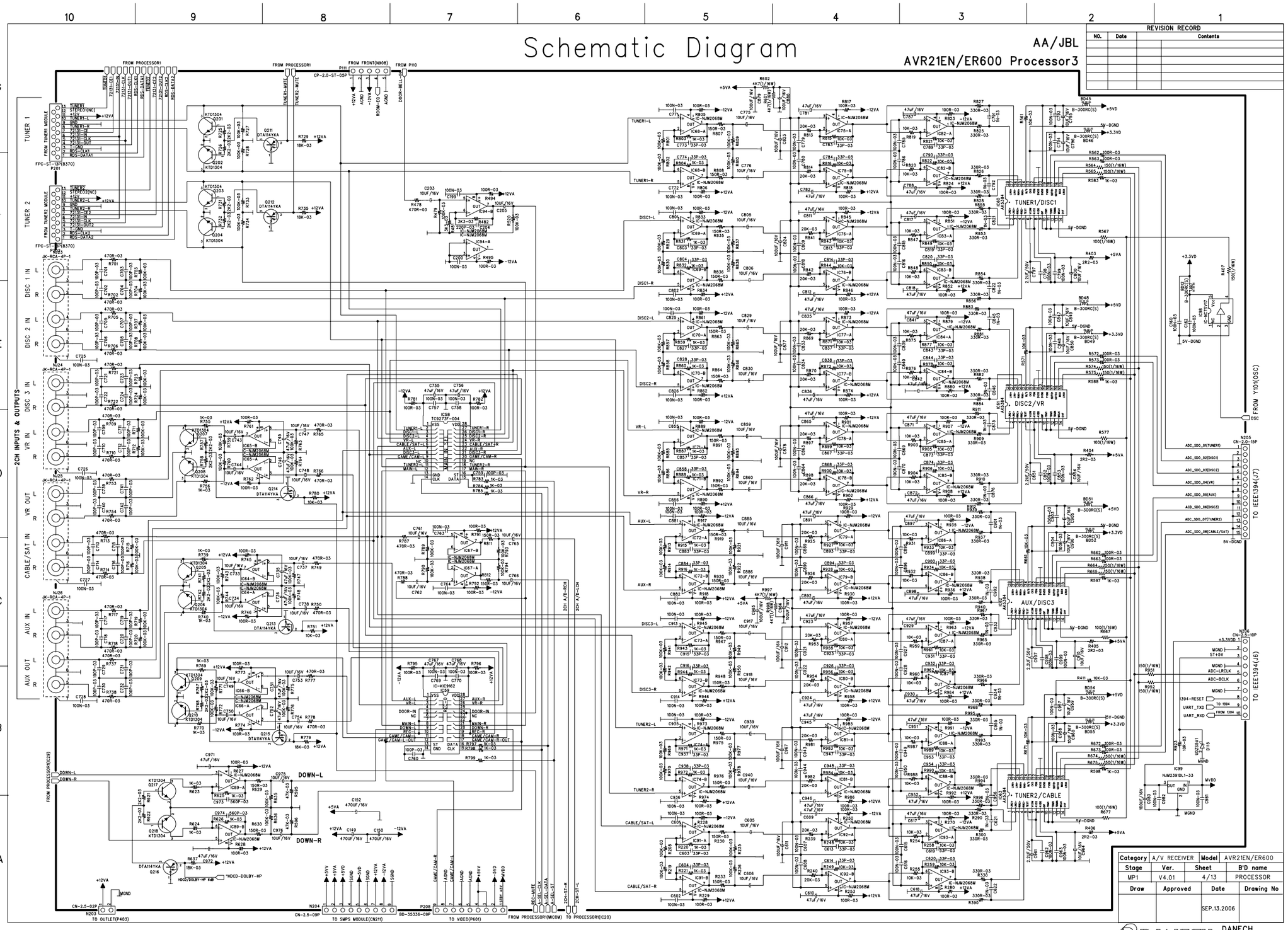

Category	A/V RECEIVER	Model	AVR21EN/ER600
Stage	Ver.	Sheet	B'D name
MP1	V4.01	4/13	PROCESSOR
Draw	Approved	Date	Drawing No
		SEP.13.2006	

DANECH COMPANY LTD.

Schematic Diagram

AA/JBL

AVR21EN/ER600 VIDEO-1

REVISION RECORD		
NO.	Date	Contents

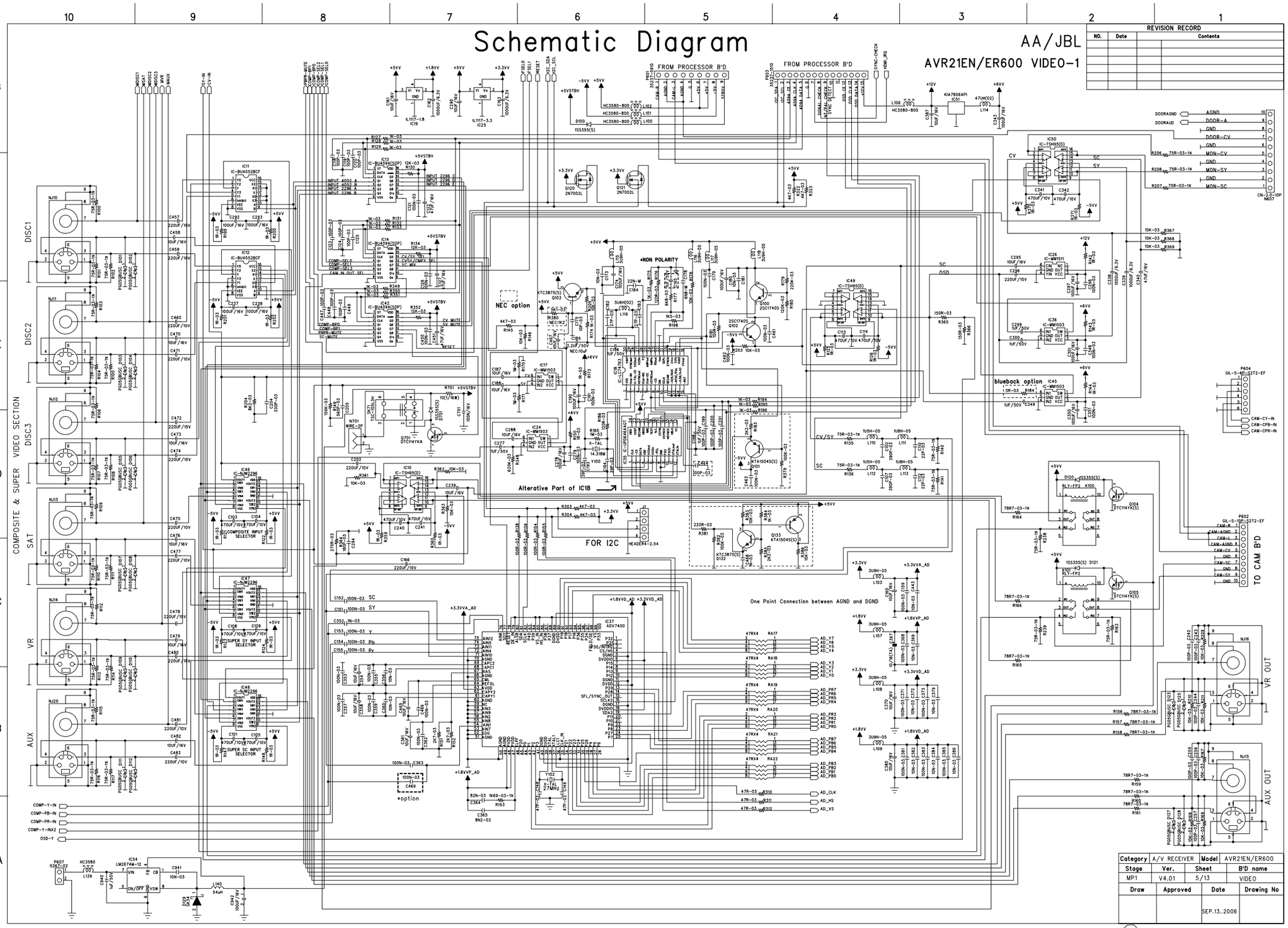

Category	A/V RECEIVER	Model	AVR21EN/ER600
Stage	Ver.	Sheet	B'D name
MP1	V4.01	5/13	VIDEO
Draw	Approved	Date	Drawing No
		SEP.13..2006	

DANECH COMPANY LTD.

Schematic Diagram

AA/JBL

AVR21EN/ER600 VIDEO-2

REVISION RECORD		
NO.	Date	Contents

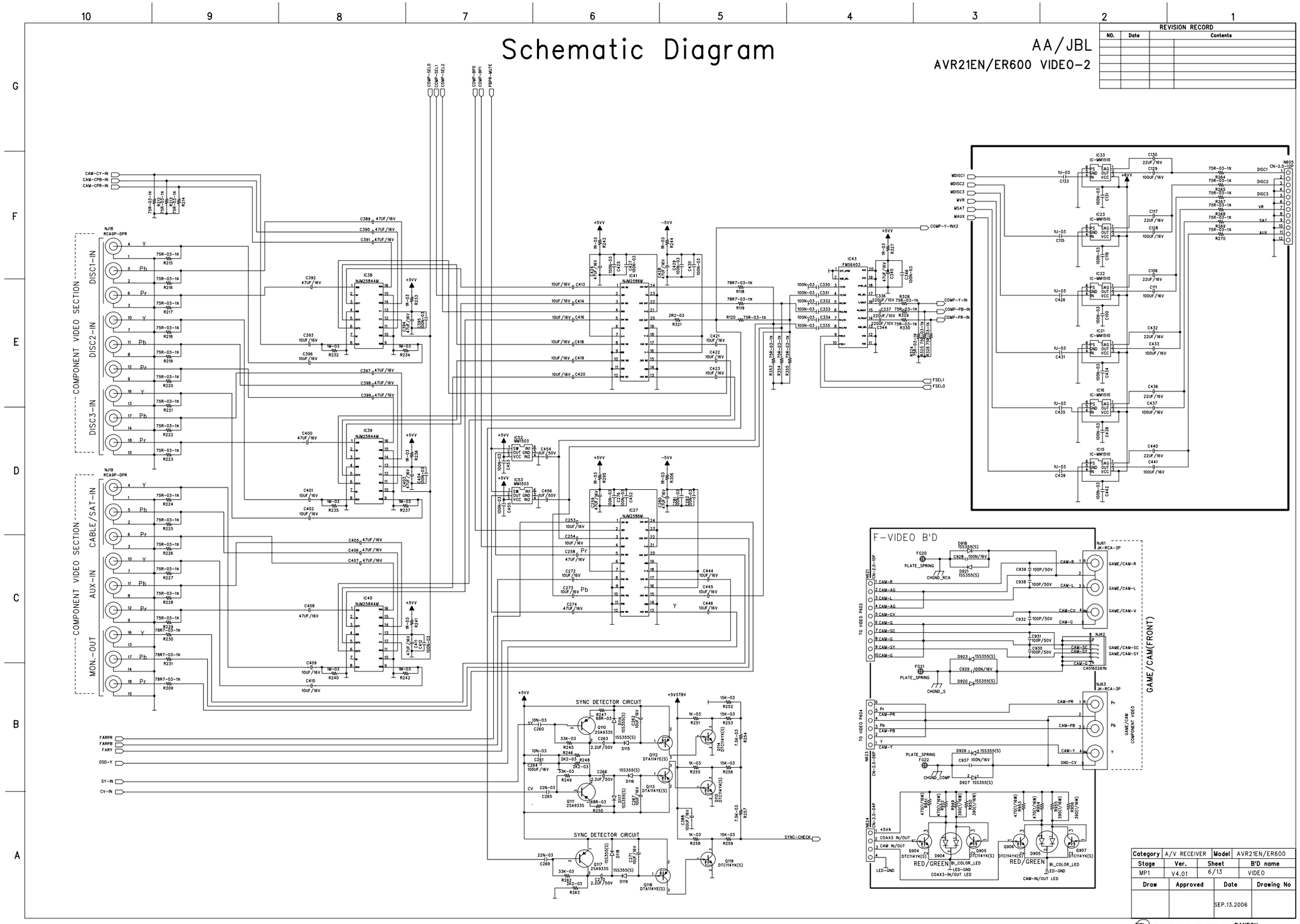

Category	A/V RECEIVER	Model	AVR21EN/ER600
Stage	Ver.	Sheet	B'D name
MP1	V4.01	6/13	VIDEO
Draw	Approved	Date	Drawing No
		SEP.13.2006	

DANECH COMPANY LTD.