RF TRANSMITTOR BLOCK DIAGRAM

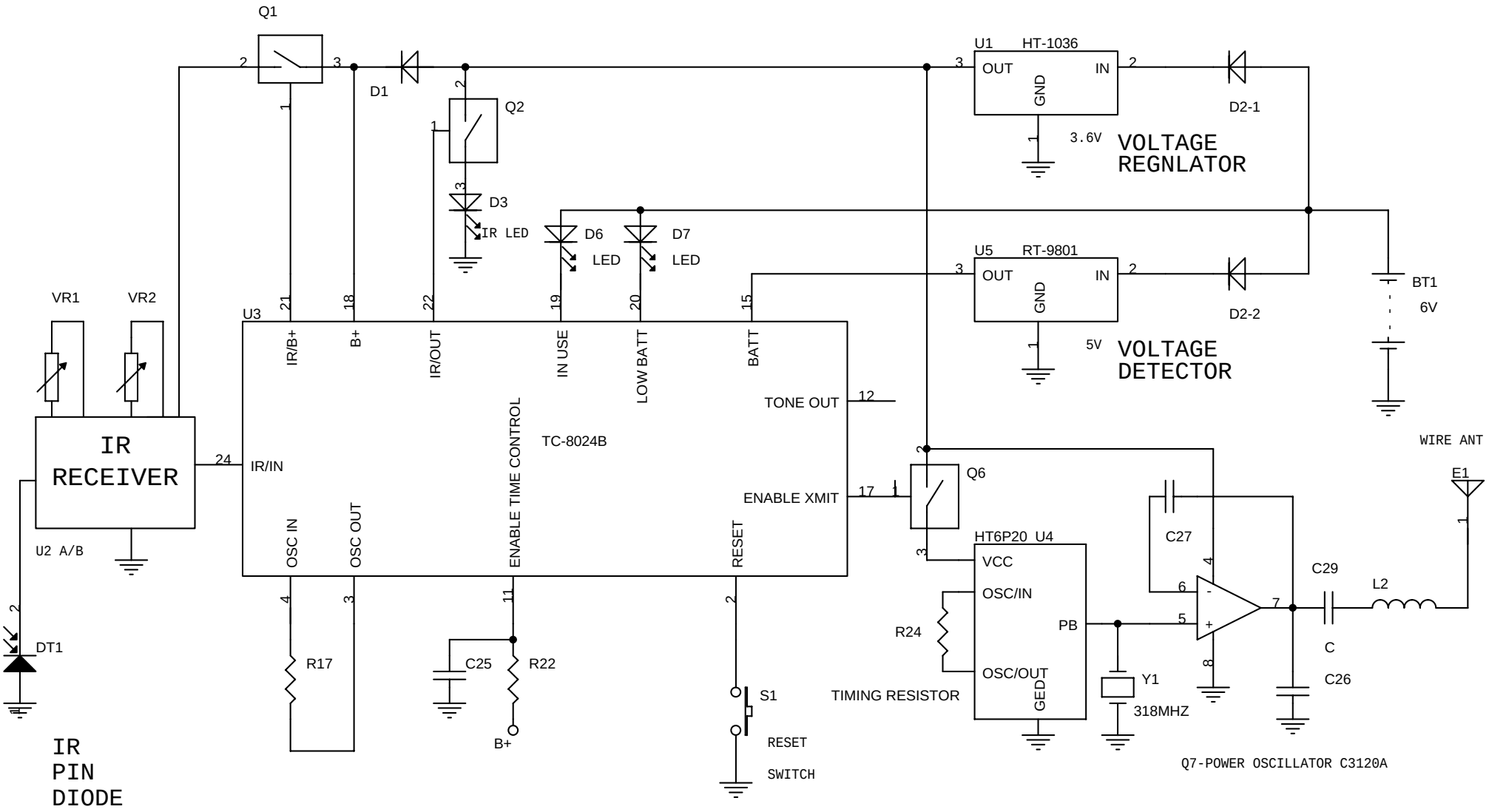

Title <Title>		
Size A	Document Number BLOCK DIAGRAM	Rev <RevCode>
Date: Tuesday, January 27, 2004	Sheet 1 of 1	