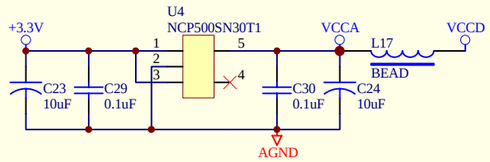

VCCA: RFIC Power Supply
VCCD: Analog IC Power Supply

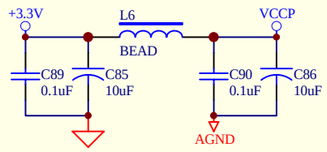

PA Power Supply close to PA.

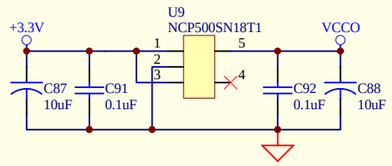

VCCO: BB+MAC IC Core Power Supply

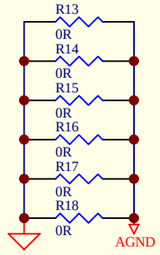

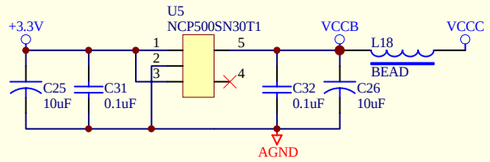

VCCB: 44MHz X'TAL OSC Power Supply
VCCC: 2.4GHz VCO LO CP Power Supply

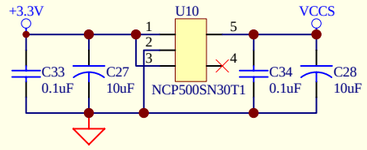

VCCS: BB+MAC IC I/O Power Supply

TX: TR_SW="1", TR_SW_n="0"
RX: TR_SW="0", TR_SW_n="1"

ANT1: AntSelect "0"; AntSelect_n "1"
ANT2: AntSelect "1"; AntSelect_n "0"

Pi-PAD for line-ups: -4dB

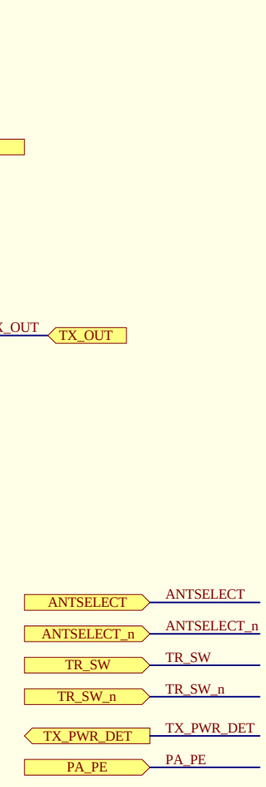

Title: *Reference Design of 802.11b WLAN mini-PCI Card*			
Size: A3	Model: ***BM6621***		Rev: ***R2.02***
30-Dec-2002	Sheet: 1 of 3	Drawn by:	

INPROCOMM
Inprocomm, Inc.
9F,No.93 Shuei-Yuan Street
Hsinchu 300 Taiwan
www.inprocomm.com.tw

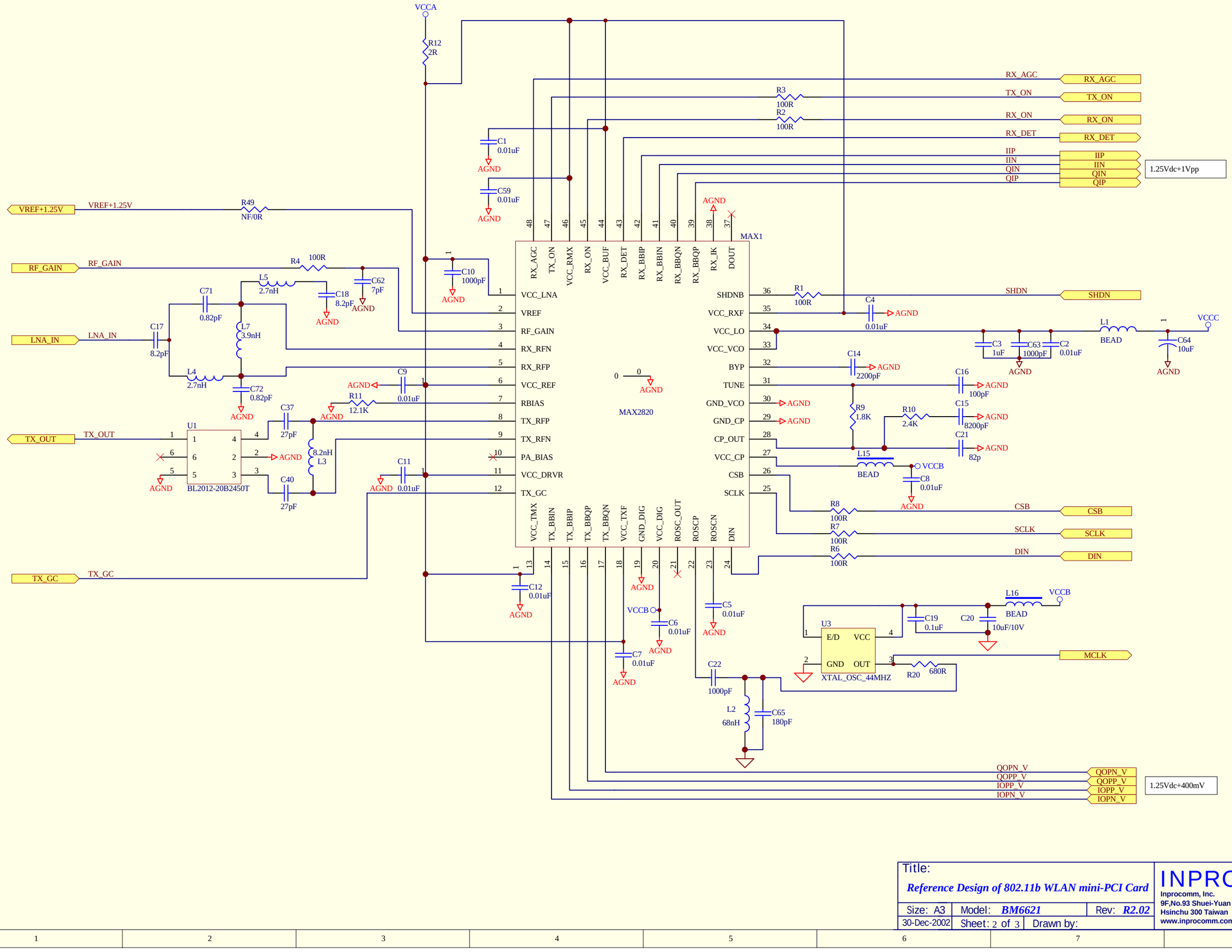

Title:	*Reference Design of 802.11b WLAN mini-PCI Card*
Size: A3	Model: *BM6621* Rev: *R2.02*
30-Dec-2002	Sheet: 2 of 3 Drawn by:

INPROCOMM
Inprocomm, Inc.
9F,No.93 Shuei-Yuan Street
Hsinchu 300 Taiwan
www.inprocomm.com.tw

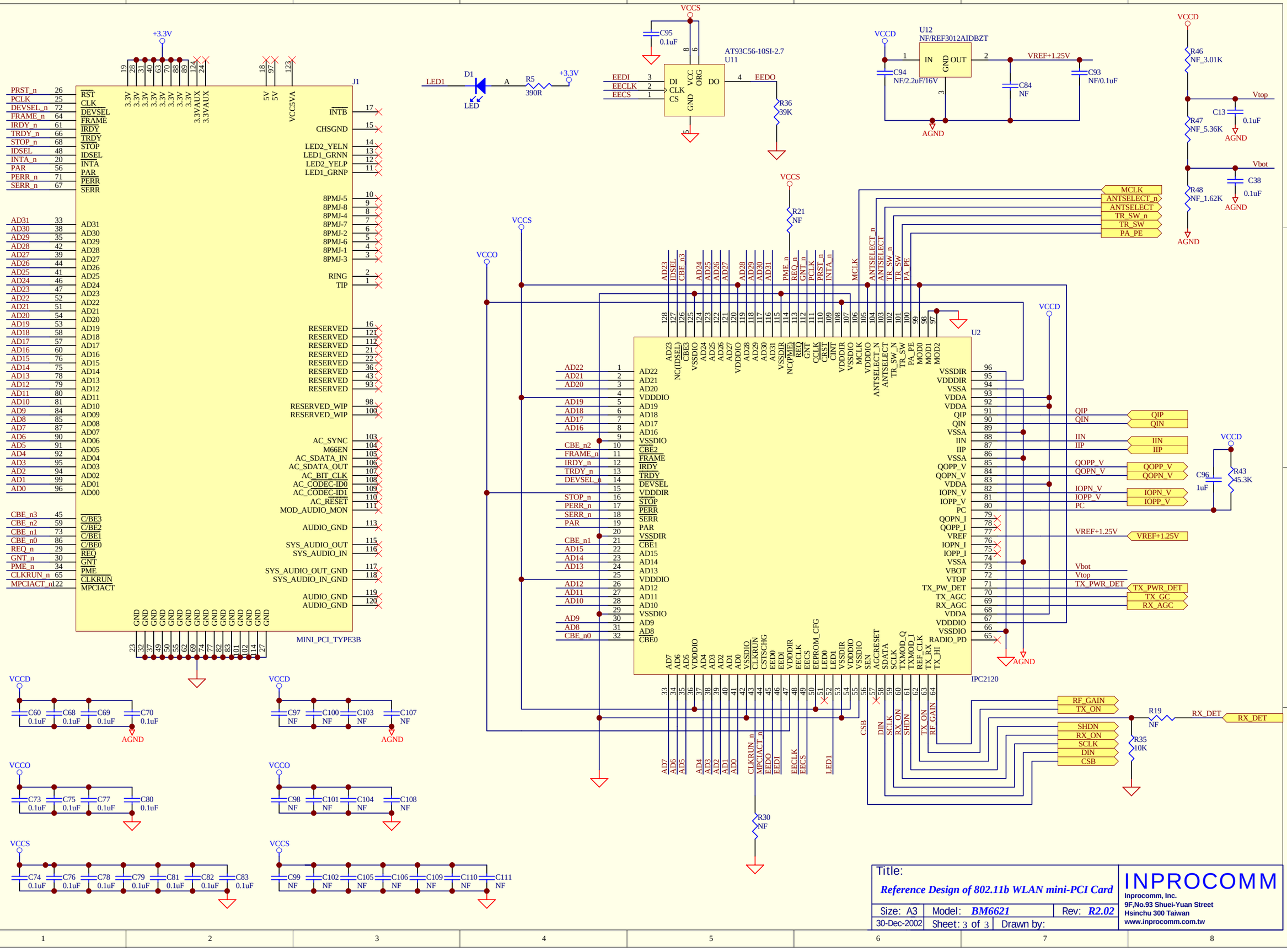

Title:

Reference Design of 802.11b WLAN mini-PCI Card

Size: A3	Model: *BM6621*	Rev: *R2.02*
30-Dec-2002	Sheet: 3 of 3	Drawn by:

INPROCOMM
Inprocomm, Inc.
9F,No.93 Shuei-Yuan Street
Hsinchu 300 Taiwan
www.inprocomm.com.tw