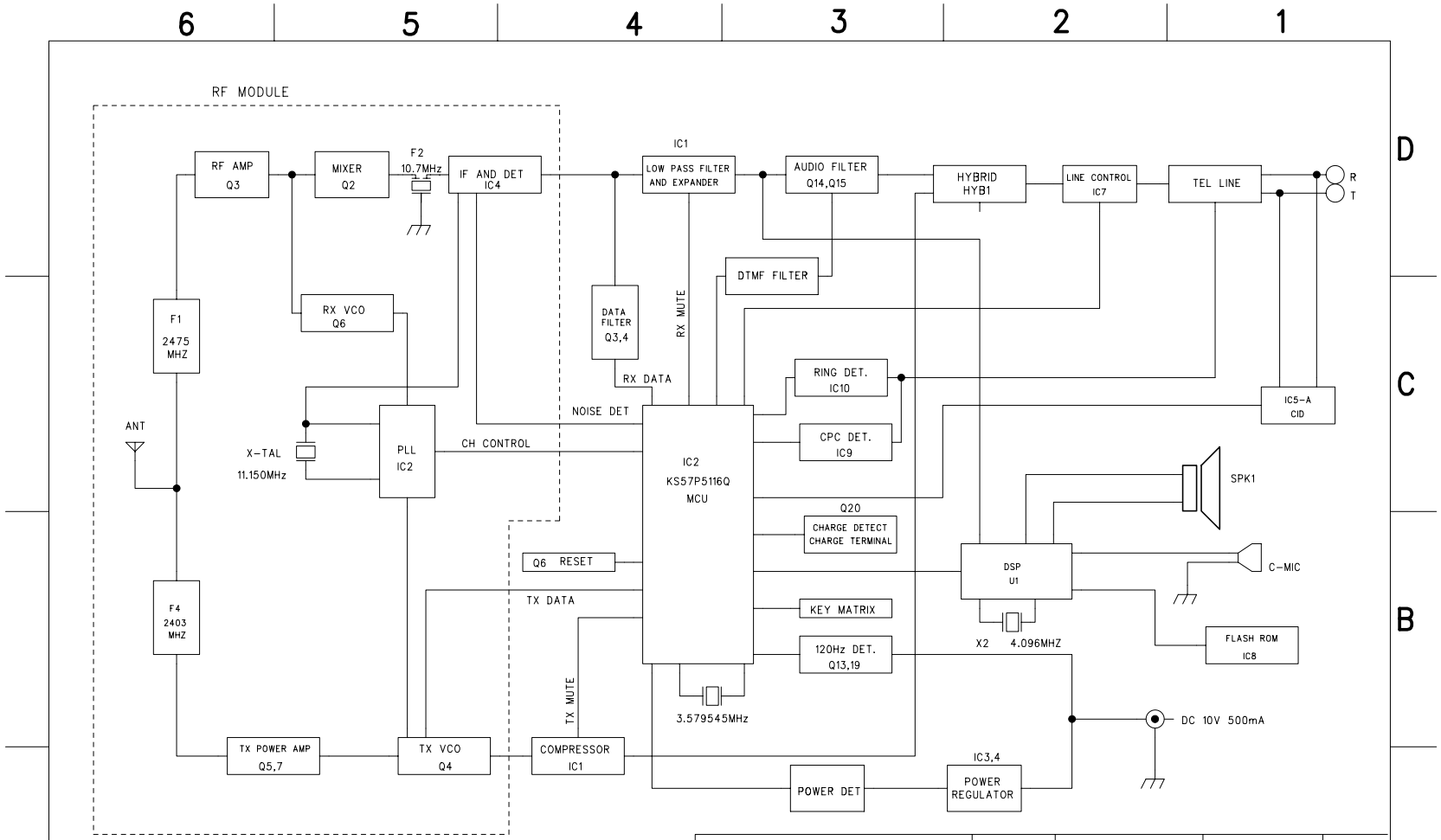

ITEC CO.,LTD			NAME	BASE		VIEW	
MODEL NO.	CH-2420		DWG.NO.			UNIT	
DRAWN	CHECKED	APPROVED	DATE	2001.12.28		SCALE	/
			SHEET	/	REV.	FILE NAME	CT-903BBL