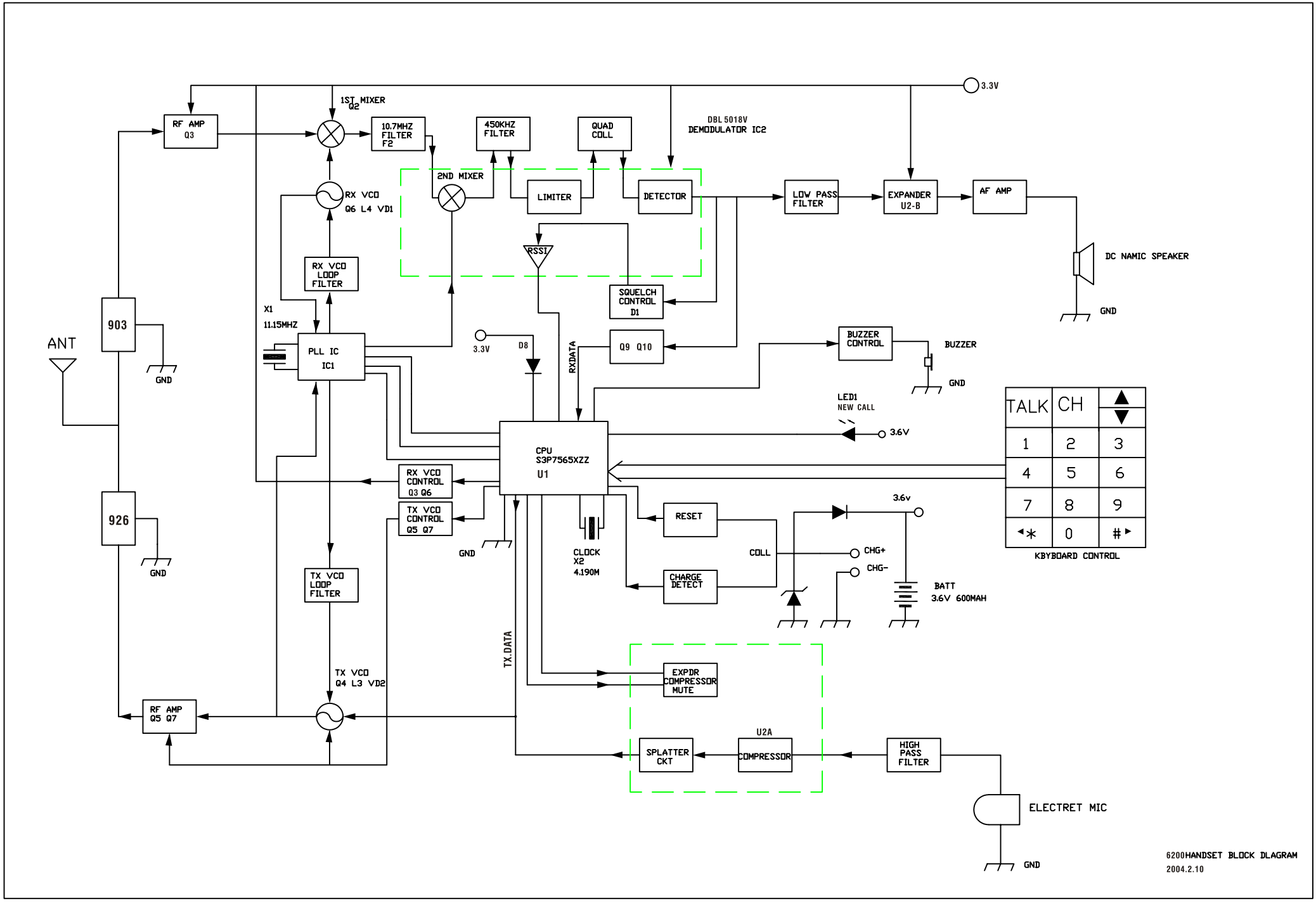
3.3V
1ST MIXER
Q2
RF AMP
Q3
10.7MHZ
FILTER
F2
450KHZ
FILTER
QUAD
COLL
DBL 5018V
DEMODULATOR IC2
2ND MIXER
RX VCO
Q6 L4 VD1
LIMITER
DETECTOR
LOW PASS
FILTER
EXPANDER
U2-B
AF AMP
DC NAMIC SPEAKER
GND
RSSI
RX VCO
LOOP
FILTER
SQUELCH
CONTROL
D1
X1
11.15MHZ
903
ANT
GND
PLL IC
IC1
3.3V
D8
RXDATA
Q9 Q10
BUZZER
CONTROL
BUZZER
GND
LED1
NEW CALL
3.6V
CPU
S3P7565XZZ
U1
TALK
CH
1
2
3
4
5
6
7
8
9
0
KBYBOARD CONTROL
RX VCO
CONTROL
Q3 Q6
TX VCO
CONTROL
Q5 Q7
926
GND
GND
RESET
CLOCK
X2
4.190M
COLL
CHG+
CHG-
3.6v
CHARGE
DETECT
BATT
3.6V 600MAH
TX VCO
LOOP
FILTER
TX.DATA
EXPDR
COMPRESSOR
MUTE
TX VCO
Q4 L3 VD2
RF AMP
Q5 Q7
U2A
SPLATTER
CKT
COMPRESSOR
HIGH
PASS
FILTER
ELECTRET MIC
GND
6200HANDSET BLOCK DLAGRAM
2004.2.10