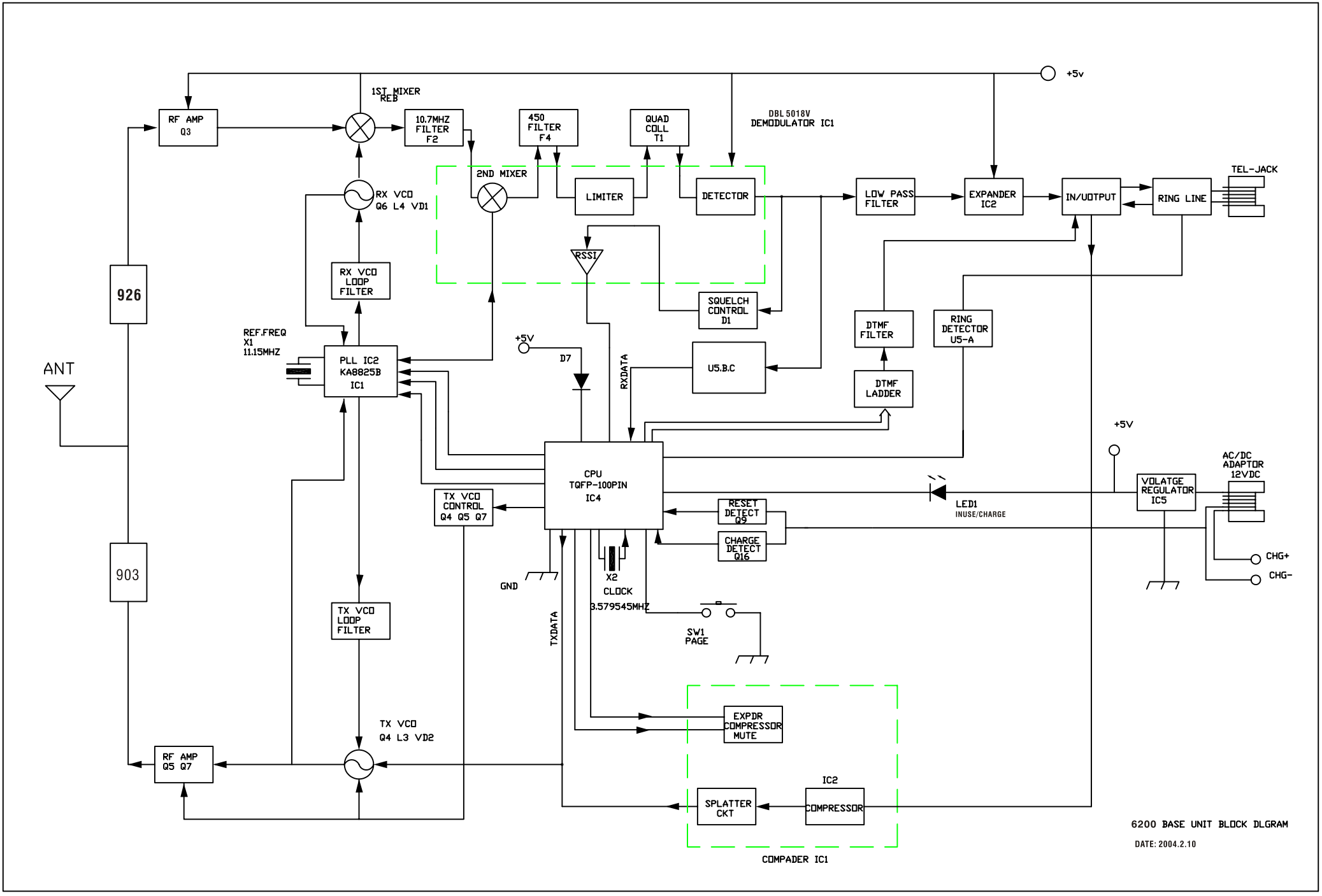
+5v
1ST MIXER
RE.B
RF AMP
Q3
10.7MHZ
FILTER
F2
450
FILTER
F4
QUAD
COLL
T1
DBL5018V
DEMODULATOR IC1
2ND MIXER
RX VCO
Q6 L4 VD1
LIMITER
DETECTOR
LOW PASS
FILTER
EXPANDER
IC2
IN/UOTPUT
RING LINE
TEL-JACK
RSSI
RX VCO
LOOP
FILTER
926
SQUELCH
CONTROL
D1
DTMF
FILTER
RING
DETECTOR
U5-A
REF.FREQ
X1
11.15MHZ
PLL IC2
KA8825B
IC1
+5V
D7
RXDATA
U5.B.C
DTMF
LADDER
ANT
+5V
CPU
TQFP-100PIN
IC4
AC/DC
ADAPTOR
12VDC
VOLATGE
REGULATOR
IC5
TX VCO
CONTROL
Q4 Q5 Q7
RESET
DETECT
Q9
LED1
INUSE/CHARGE
CHARGE
DETECT
Q16
CHG+
CHG-
903
GND
X2
CLOCK
3.579545MHZ
TX VCO
LOOP
FILTER
TXDATA
SW1
PAGE
EXPDR
COMPRESSOR
MUTE
TX VCO
Q4 L3 VD2
RF AMP
Q5 Q7
IC2
SPLATTER
CKT
COMPRESSOR
COMPADER IC1
6200 BASE UNIT BLOCK DLGRAM
DATE: 2004.2.10