PAGE :

DOC. No: DWG-EB-MSD119-00

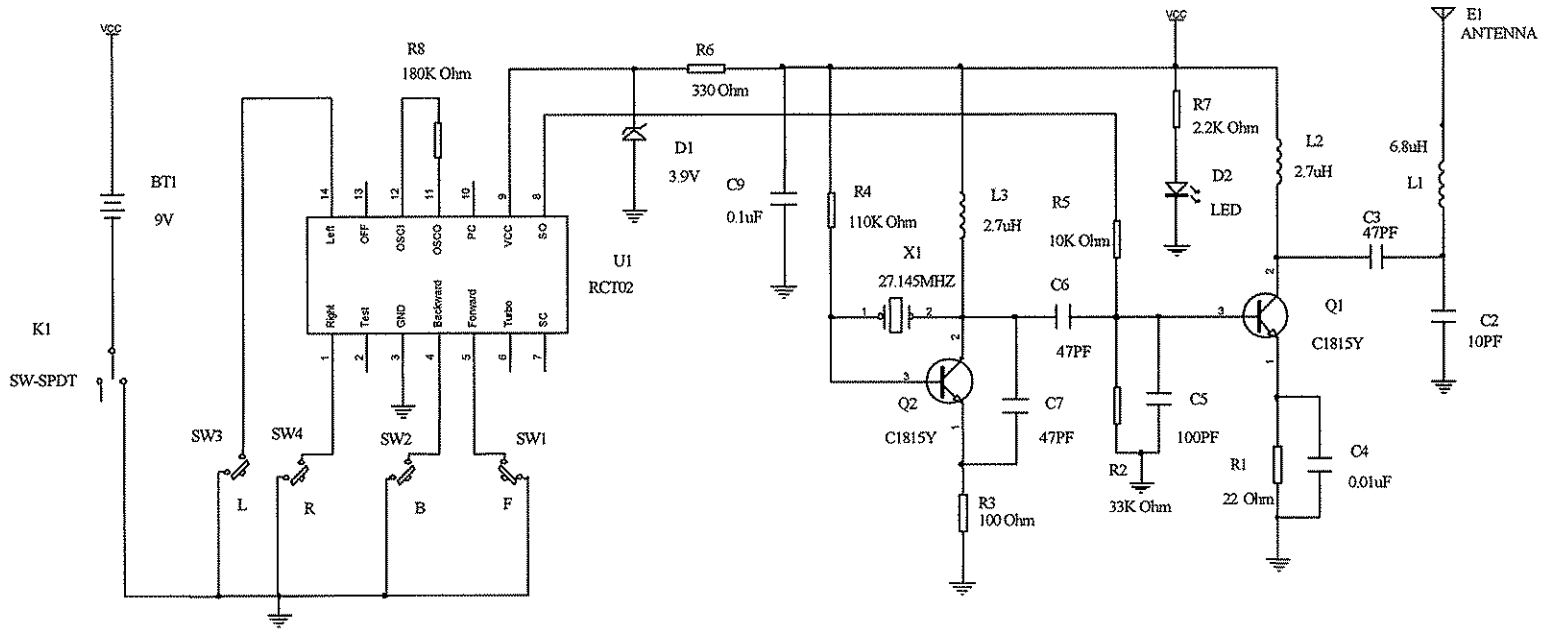


| | | | | | |
|---|---|---|---|---|---|
| Title: 27.145MHZ TX | | | Model Name: 1:18 Scale Nascar R/C Car | | |
| Drawn: | Checked: | Approved: | Model No.: JN518 | | |
| | | | Date: 2006-04-21 | Size | A4 |
| Team Up Product Development Co , Ltd . | | | DWG. No. 0B11351A | Rev. | A/1 |

FM-RD-20A