REVISED

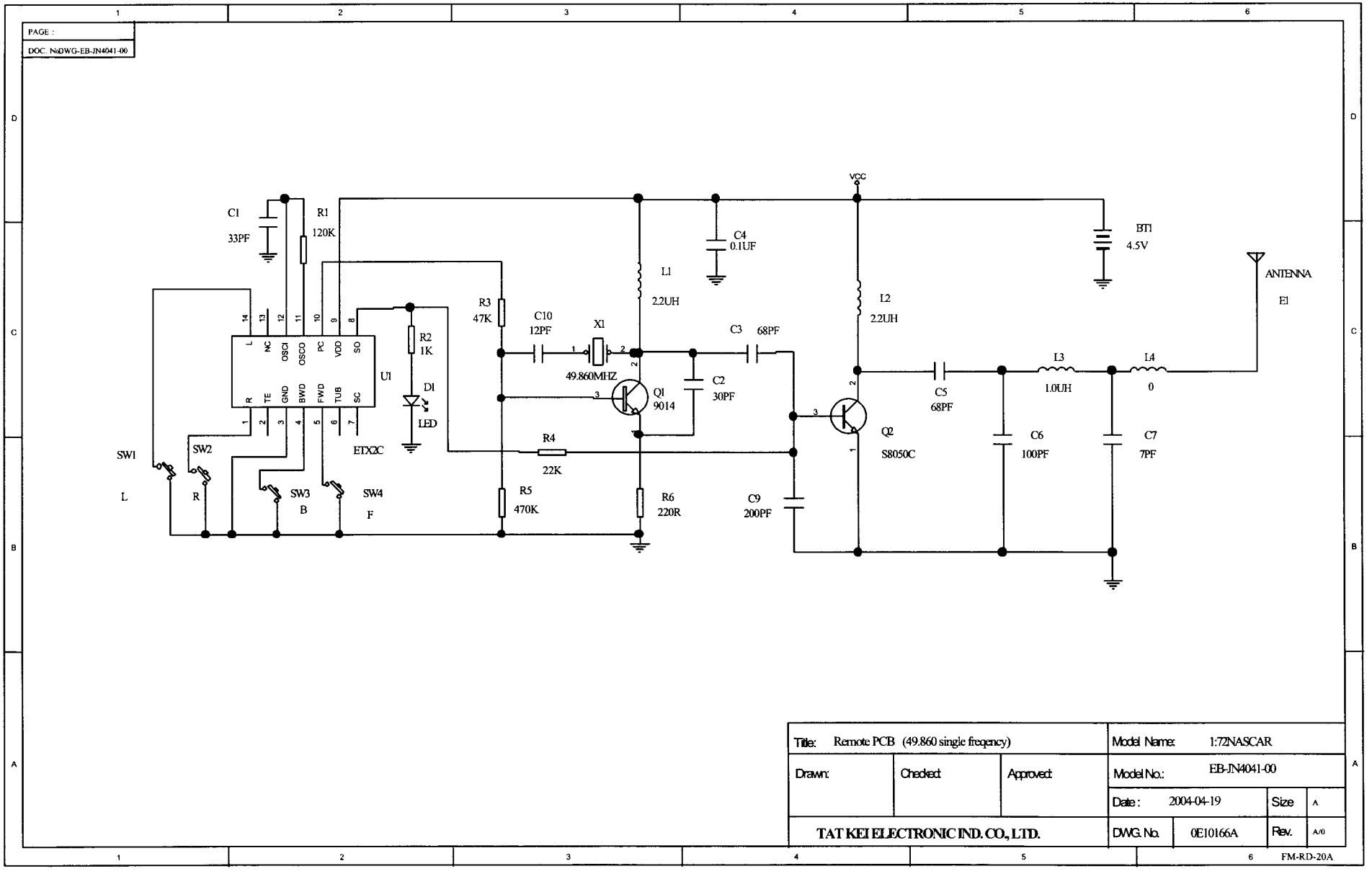
PAGE :
DOC. No.DWG-EB-JN4041-00
C1
33PF
R1
120K
R2
1K
D1
LED
U1
ETX2C
L
NC
OSCI
OSCO
PC
VDD
SO
R
TE
GND
BWD
FWD
TUB
SC
SW1
L
SW2
R
SW3
B
SW4
F
R3
47K
C10
12PF
X1
49.860MHZ
Q1
9014
C2
30PF
R4
22K
R5
470K
R6
220R
L1
2.2UH
C4
0.1UF
C3
68PF
C9
200PF
VCC
L2
2.2UH
Q2
S8050C
C5
68PF
C6
100PF
L3
1.0UH
L4
0
C7
7PF
BT1
4.5V
ANTENNA
E1
Title: Remote PCB (49.860 single freqency)
Model Name: 1:72NASCAR
Drawn:
Checked:
Approved:
Model No.: EB-JN4041-00
Date : 2004-04-19
Size A
TAT KEI ELECTRONIC IND. CO., LTD.
DWG. No. 0E10166A
Rev. A/0
FM-RD-20A