PAGE :

DOC. No:

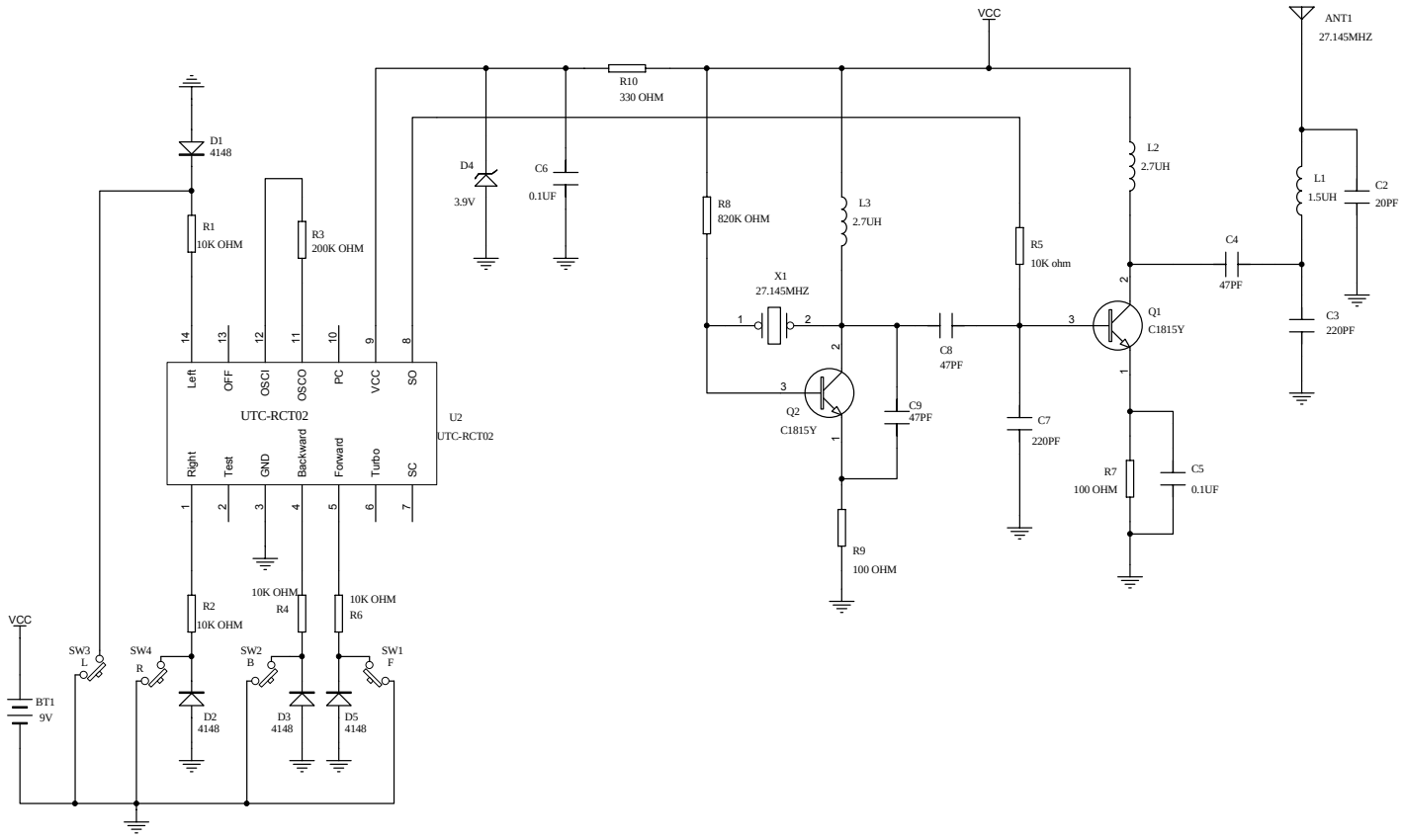

Title:	27.145MHZ TX		Model Name:	1:32 SCALE D.I.Y R/C KIT	
Drawn:	Checked:	Approved:	Model No.:	JN-232	
			Date :	2006-9-22	Size A
Team Up Product Development Co , Ltd .			DWG. No.		A/0

FM-RD-20A