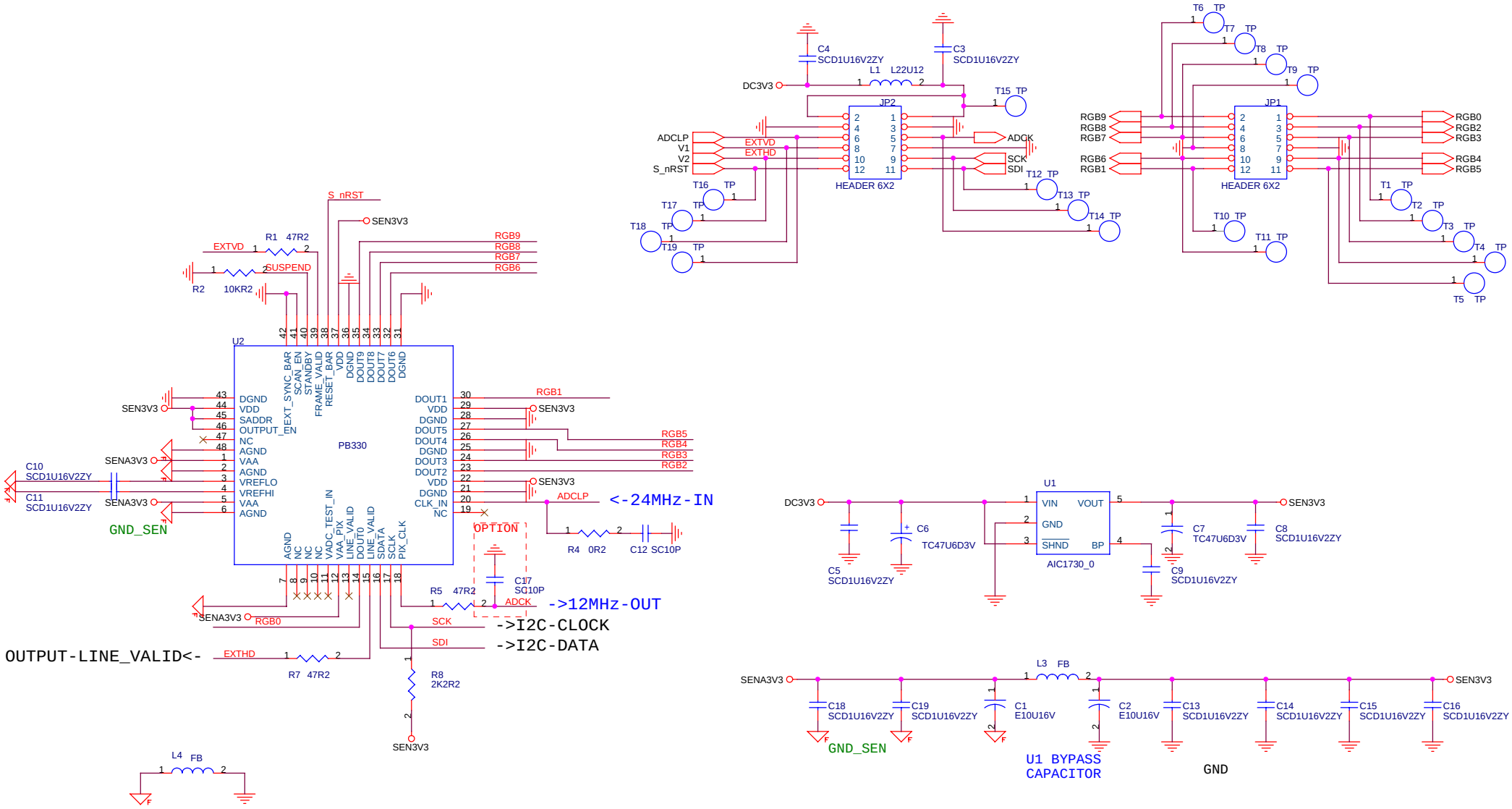


**AIPTEK International Inc.**
No. 5-1, Innovation Road 1 Science-Based Industrial Park, HsinChu 300, Taiwan, R.O.C.

Approver:
EMC/EMI Concurred:

Title: SENSOR
Designer: TaiLi Liu

Size: B
Document Number: 59-171-03020,PCB,SENSOR BOARD,8BI-W32
Rev: A

Date: Sunday, March 30, 2003
Sheet 2 of 2