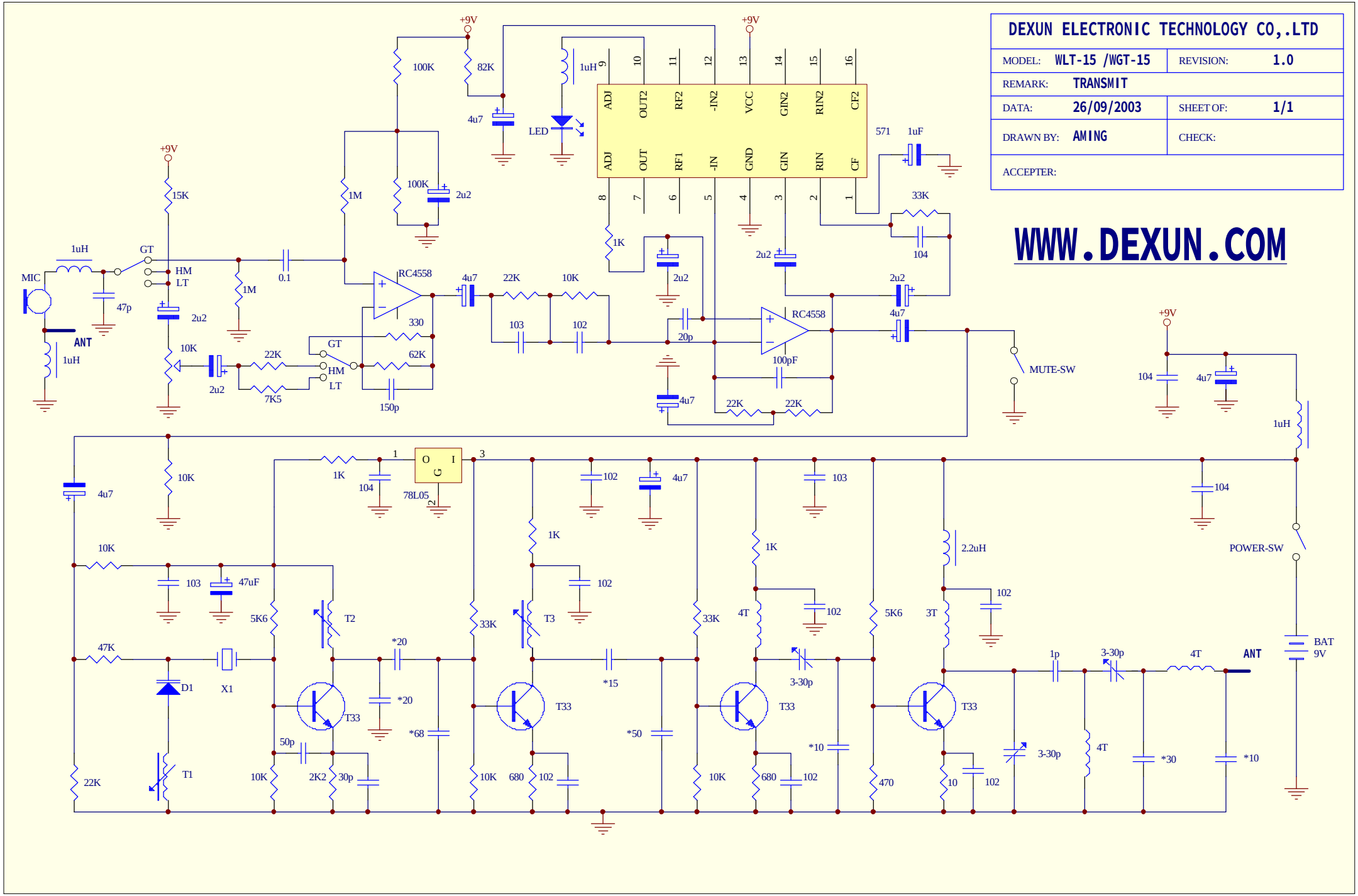
DEXUN ELECTRONIC TECHNOLOGY CO,.LTD
MODEL: WLT-15 /WGT-15
REVISION: 1.0
REMARK: TRANSMIT
DATA: 26/09/2003
SHEET OF: 1/1
DRAWN BY: AMING
CHECK:
ACCEPTER:
WWW.DEXUN.COM
+9V
MIC
ANT
GT
HM
LT
RC4558
LED
MUTE-SW
POWER-SW
BAT 9V
78L05
T1
T2
T3
T33
X1
D1