FCC ID:

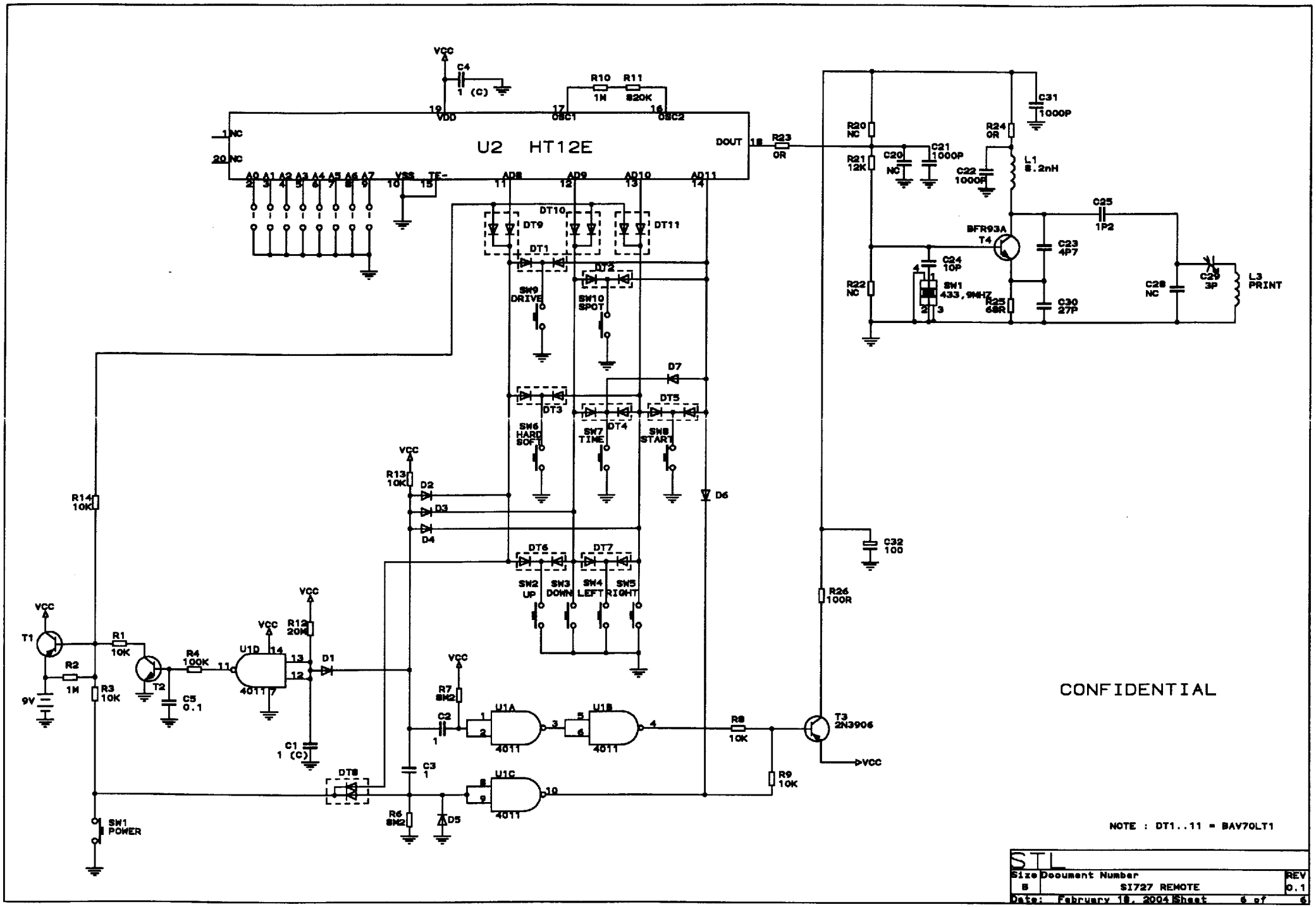
U2 HT12E
VCC
C4
1 (C)
R10 1M
R11 820K
VDD
OSC1
OSC2
DOUT
R23 0R
1NC
20NC
A0 A1 A2 A3 A4 A5 A6 A7
VSS
TE-
AD8
AD9
AD10
AD11
DT1
DT2
DT3
DT4
DT5
DT6
DT7
DT8
DT9
DT10
DT11
SW9 DRIVE
SW10 SPOT
SW6 HARD SOF
SW7 TIME
SW8 START
SW2 UP
SW3 DOWN
SW4 LEFT
SW5 RIGHT
D1
D2
D3
D4
D5
D6
D7
R13 10K
R14 10K
R20 NC
R21 12K
R22 NC
R24 0R
R25 68R
R26 100R
C31 1000P
C20 NC
C21 1000P
C22 1000P
L1 8.2nH
C25 1P2
BFR93A
T4
C23 4P7
C24 10P
SW1 433.9MHZ
C30 27P
C28 NC
C29 3P
L3 PRINT
C32 100
T1
R1 10K
R2 1M
R3 10K
9V
T2
R4 100K
C5 0.1
U1D
4011
R12 20M
C1 1 (C)
R7 SW2
C2 1
C3 1
R6 SW2
U1A
U1B
U1C
4011
R8 10K
R9 10K
T3 2N3906
SW1 POWER
CONFIDENTIAL
NOTE : DT1..11 = BAV70LT1
STL
Size B
Document Number
SI727 REMOTE
REV 0.1
Date: February 18, 2004
Sheet 6 of 6