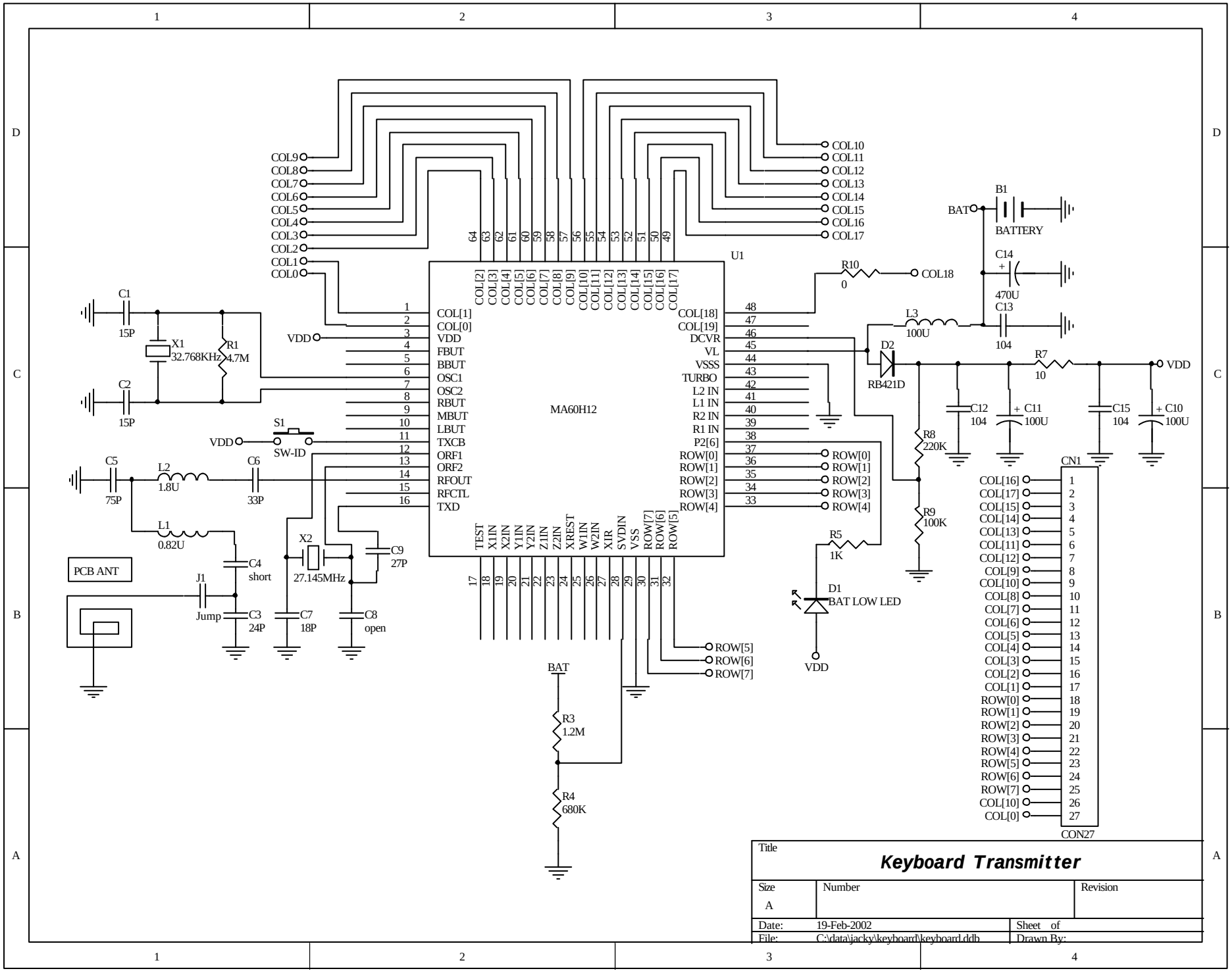
U1
MA60H12
COL[0]
COL[1]
COL[2]
COL[3]
COL[4]
COL[5]
COL[6]
COL[7]
COL[8]
COL[9]
COL[10]
COL[11]
COL[12]
COL[13]
COL[14]
COL[15]
COL[16]
COL[17]
COL[18]
COL[19]
VDD
FBUT
BBUT
OSC1
OSC2
RBUT
MBUT
LBUT
TXCB
ORF1
ORF2
RFOUT
RFCTL
TXD
DCVR
VL
VSSS
TURBO
L2 IN
L1 IN
R2 IN
R1 IN
P2[6]
ROW[0]
ROW[1]
ROW[2]
ROW[3]
ROW[4]
ROW[5]
ROW[6]
ROW[7]
TEST
X1IN
X2IN
Y1IN
Y2IN
Z1IN
Z2IN
XREST
W1IN
W2IN
XIR
SVDIN
VSS
B1
BATTERY
BAT
C14
470U
C13
104
R10
0
L3
100U
D2
RB421D
R7
10
C12
104
C11
100U
C15
104
C10
100U
R8
220K
R9
100K
R5
1K
D1
BAT LOW LED
CN1
CON27
C1
15P
C2
15P
X1
32.768KHz
R1
4.7M
S1
SW-ID
C5
75P
L2
1.8U
C6
33P
L1
0.82U
C4
short
J1
Jump
C3
24P
PCB ANT
X2
27.145MHz
C7
18P
C9
27P
C8
open
R3
1.2M
R4
680K
Title
Keyboard Transmitter
Size
A
Number
Revision
Date: 19-Feb-2002
Sheet of
File: C:\data\jacky\keyboard\keyboard.ddb
Drawn By: