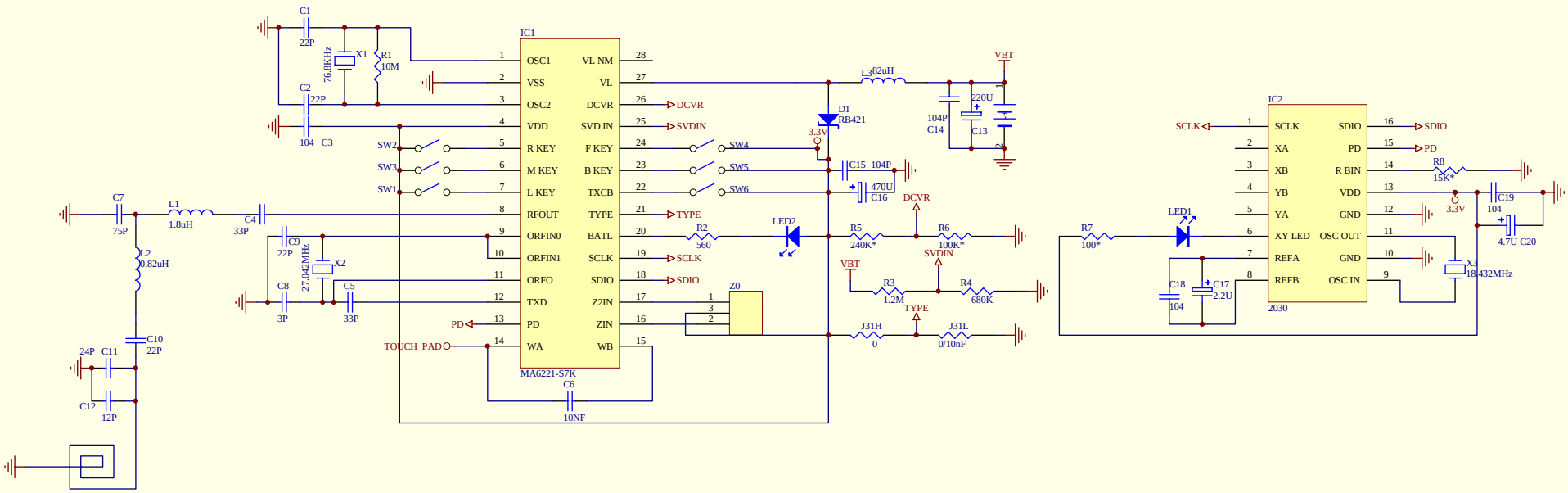

	Sensor-90	Sensor 0	Sensor+90
J31H	0	X	X
J31L	X	0	0/10nF

Title: OPTICAL MOUSE		
Size: B	Number	Revision
Date: 27-Dec-2003	Sheet of	
File: \\Newtone-quan\H81030\H81030.Ddb	Drawn By:	