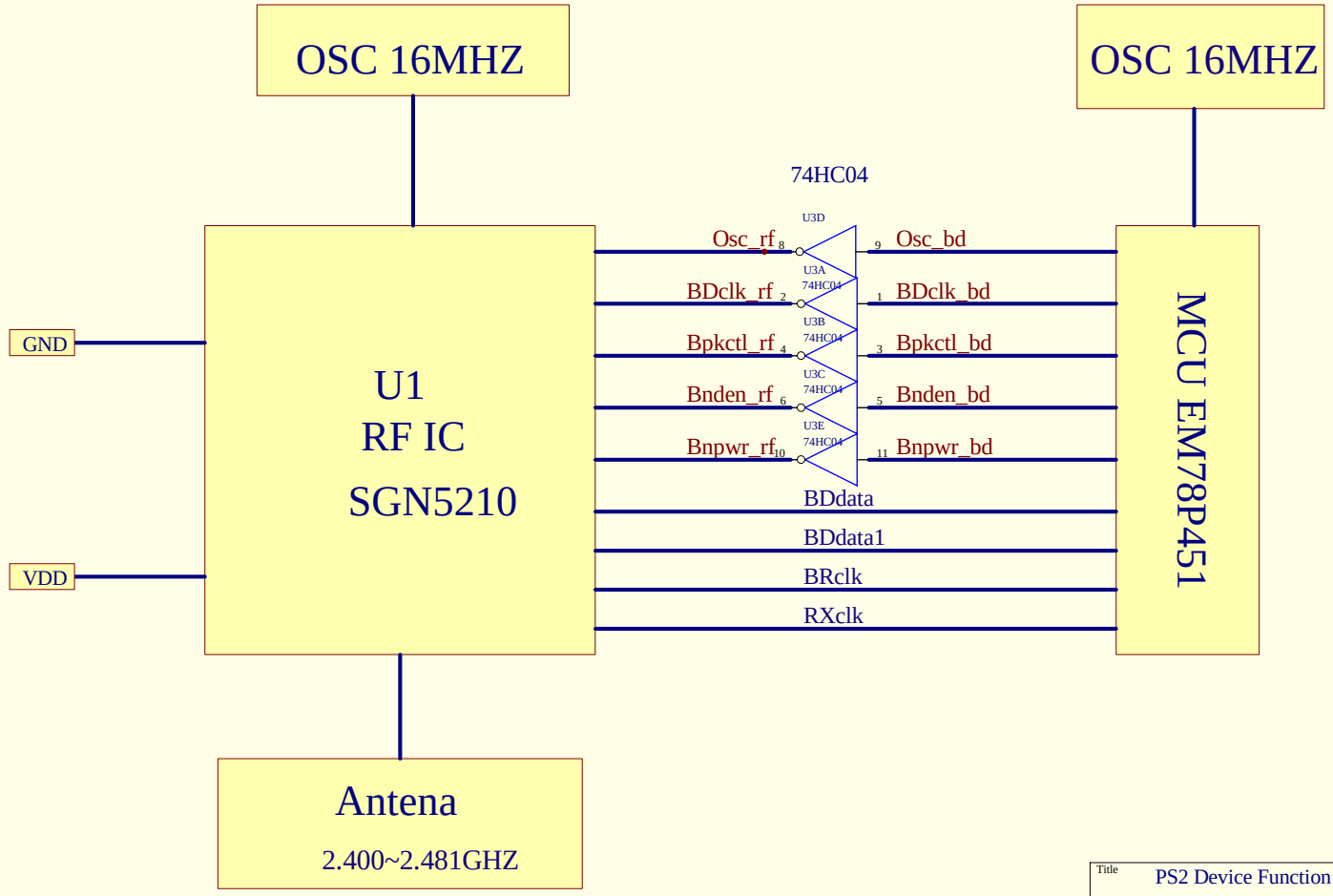

Title	PS2 Device Function Block Schematic	
Size B	Number	Revision Ver1.1
Date: 26-Aug-2005	Sheet of	
File: C:\Documents and Settings\kent\桌面\SG2Device.DSB		