12 Module Developer's Kit

The Module Developer's Kit (MDK) is used to assist in development of end-user applications for the CDMA Module. The MDK facilitates integration through the serial and digital codec pulse code modulation (PCM) interface options. Contents of the MDK are illustrated below.

Module and Interface Board

Travel Charger*

Audio Headset*

9-pin RS 232 Cable Assembly* (qty: 2)

Module Documentation CD-ROM

MMCX-to-SMA Adapter (qty: 2)

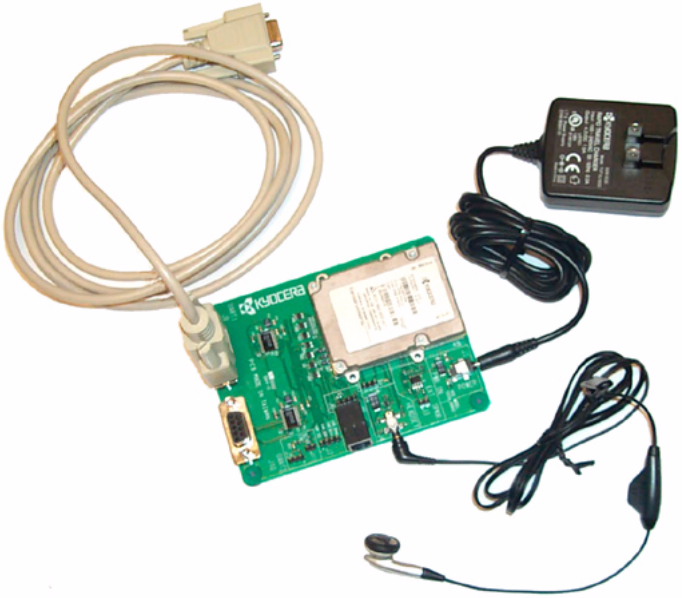

* Kit may include alternate components.

It should be clearly understood that the software in the MDK (specifically, the code in the *Kyocera 200 Module User's Guide*, 82-B7908-1) is provided for sample purposes only. The MDK software is not warranted as the basis for a deployed implementation.

13 Warranty and Product Support

The KWC CDMA Module Developer's Kit arrives having been tested as described in the Module Testing & Integration chapter. Testing should be duplicated at the integrator's/customer's facility. KWC can provide advice as to the type of test equipment needed.

This Module testing should be separate from the testing to be performed on the end product (with the Module installed). KWC offers a warranty for the CDMA Module, from the date of shipment from KWC's facility. This warranty provides the customer with a remedy for defective Modules within the warranty period and subject to all other warranty provisions.

KWC requests that the integrator retain several Modules as backup in case of failure. It is assumed that you maintain a first level of returned Module testing in your QA department prior to returning the Module to KWC. This alleviates the question of whether the failure is in the Module or the end product. "No trouble found" (NTF) occurrences on Modules returned to KWC will result in fees. KWC reserves the right, at its own discretion, to repair, replace, or issue a trade credit for any defective Module under warranty.

Warranty repair excludes warranty claims on products that have been subject to misuse, neglect, improper storage or installation, or that have been repaired, modified, or altered by a facility other than a KWC-authorized service center or a KWC-certified repair center. In all cases, the final testing of the KWC line is the sole controlling determination of Module performance.

14 Mechanical Specifications

Mating connectors

The following connectors mate with the Module.

- Module Interface Connector Mate
  Manufacturer: MOLEX Inc., www.molex.com
  Manufacturer's Part Number: 54230-0509
  Kyocera MCN: 449-24545-0509
- Module RF Connector Mate
  Standard MMCX plug, available from several manufacturers including Amp, Radiall, and Telegartner

Drawings

The following technical drawings are included in this chapter:

- Land pattern and pin assignment for Module interface mating connector
- Mounting hole and land pattern placement guidelines with recommended mounting hardware
- Module overall dimensioned drawing
- Module exploded view

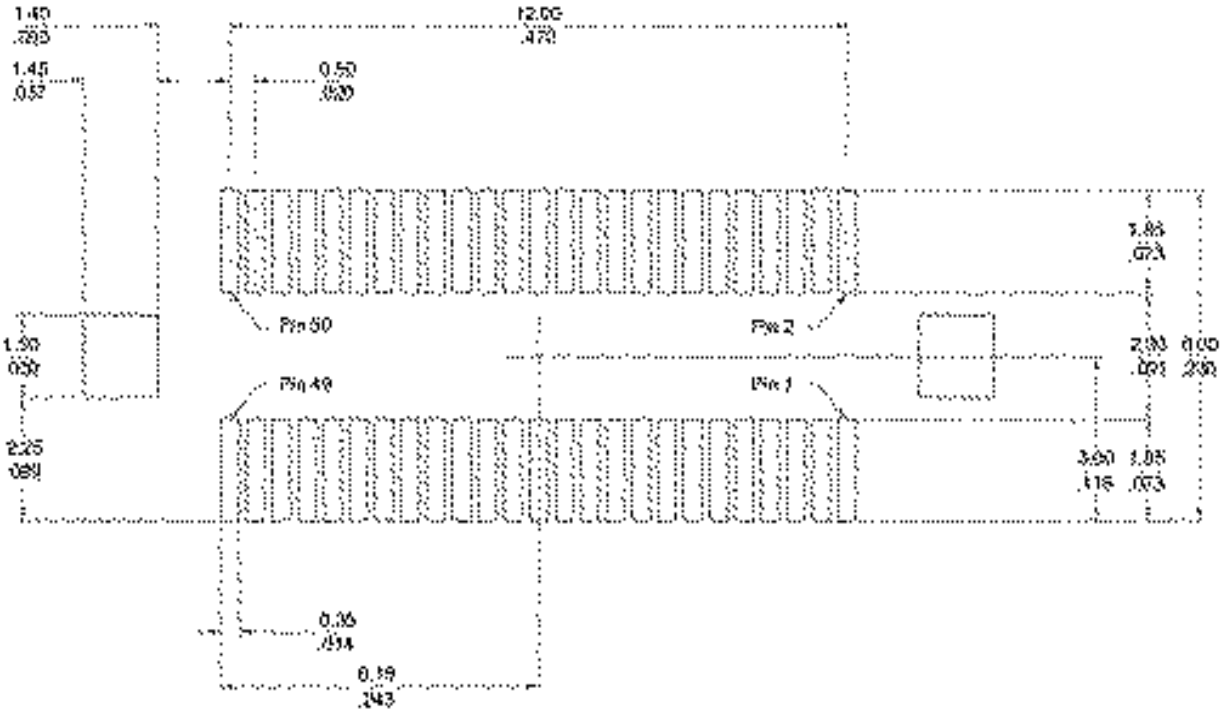

Land pattern and pin assignment for the Module interface mating connector

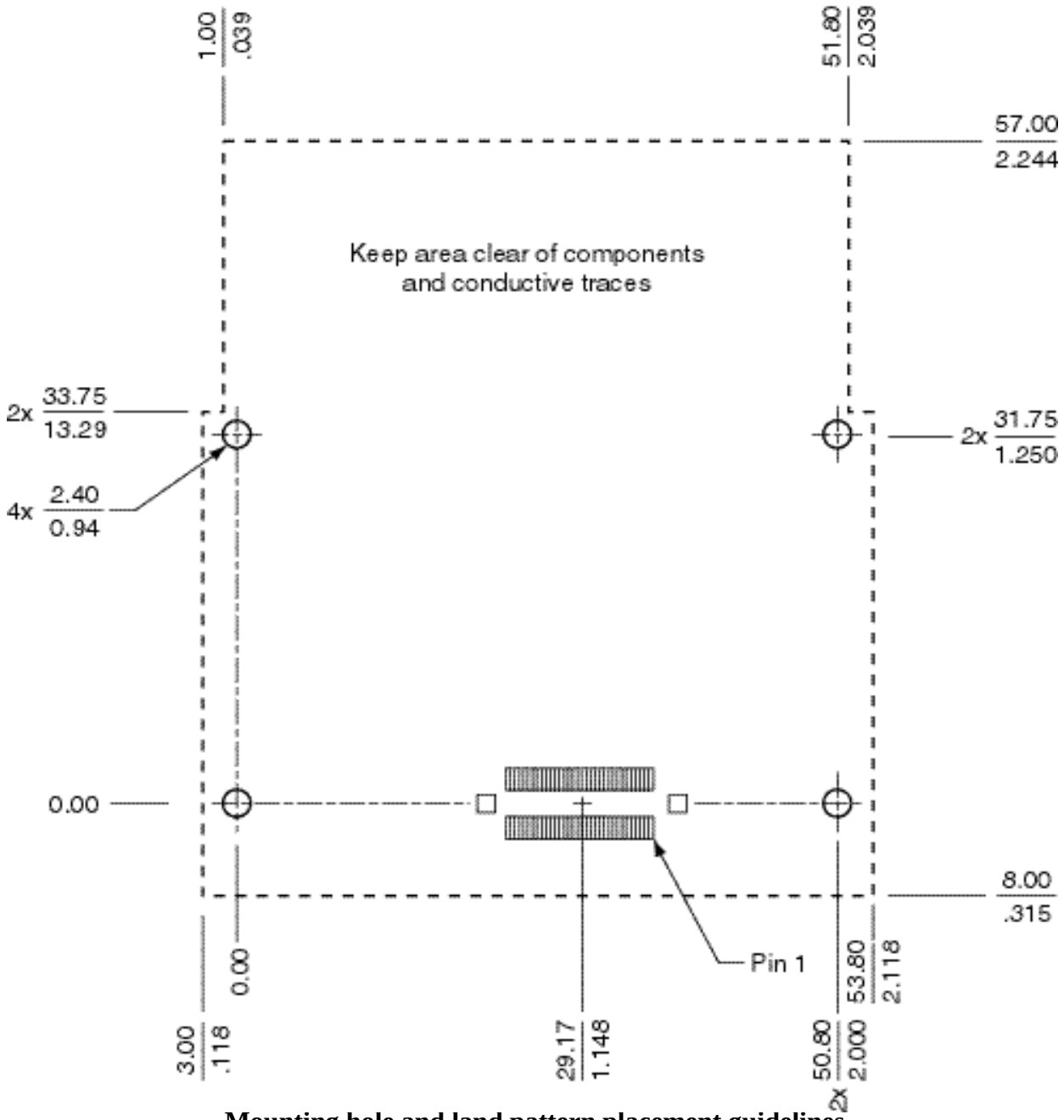

Mounting hole and land pattern placement guidelines

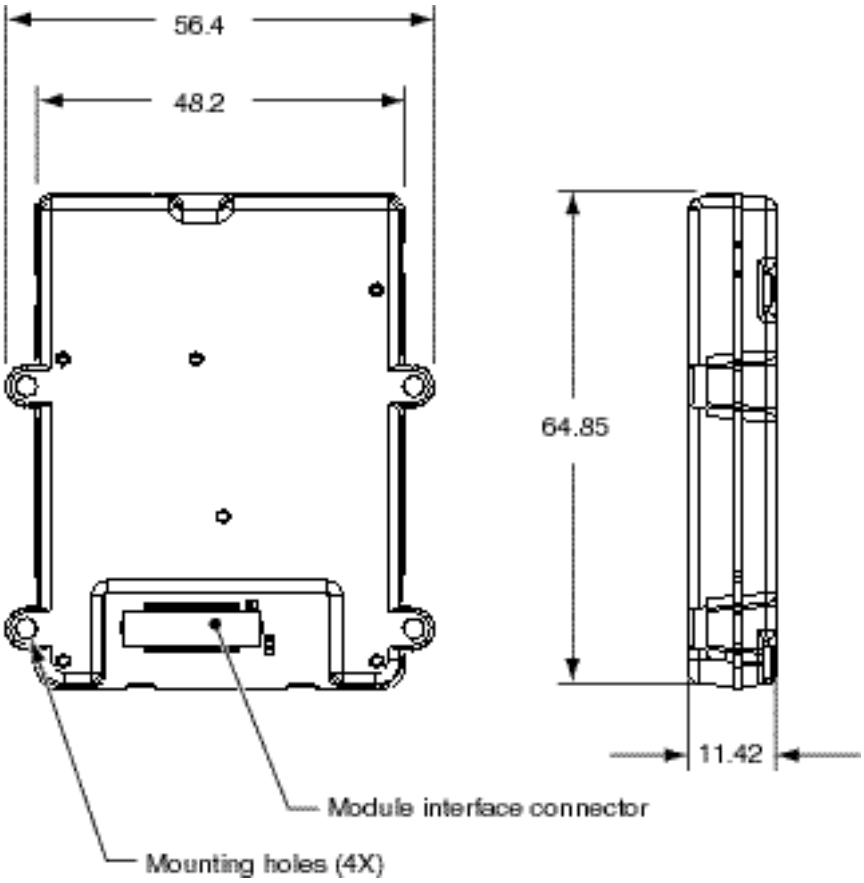

Module outside dimensions (mm)

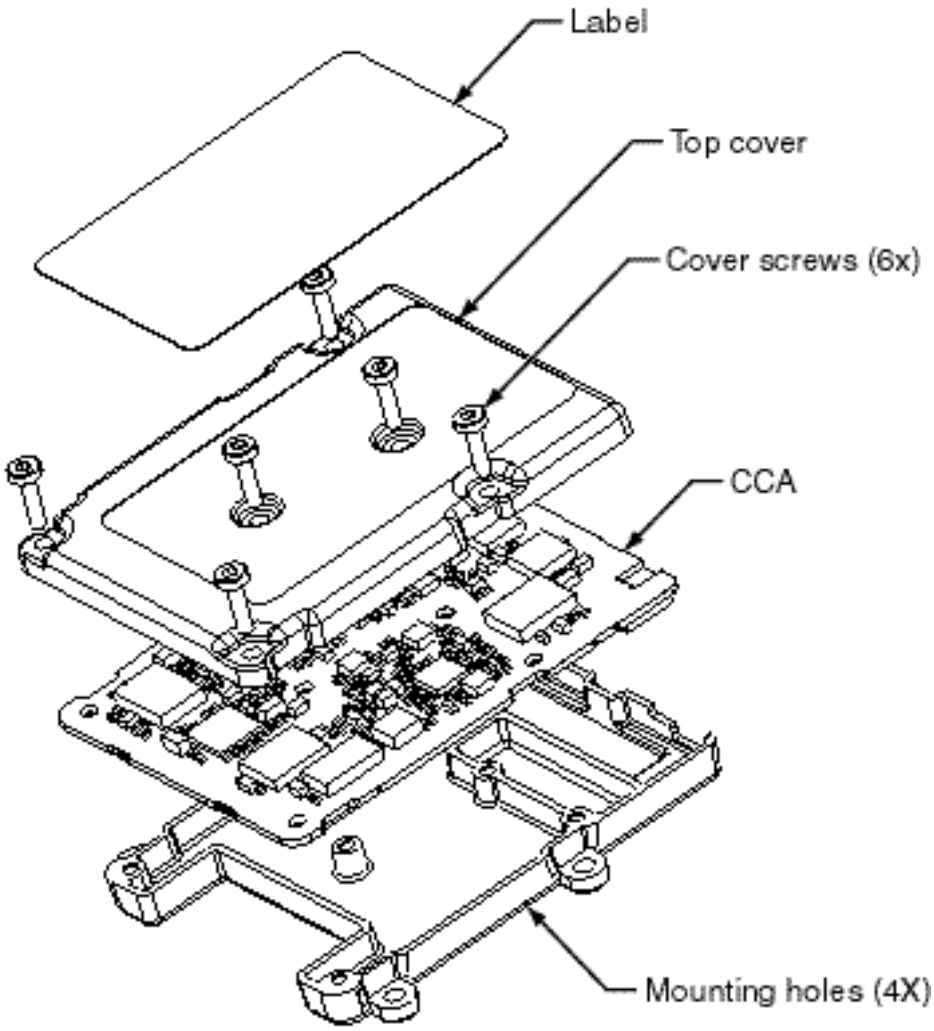

Module exploded view

15 Assignments and Signal Definitions

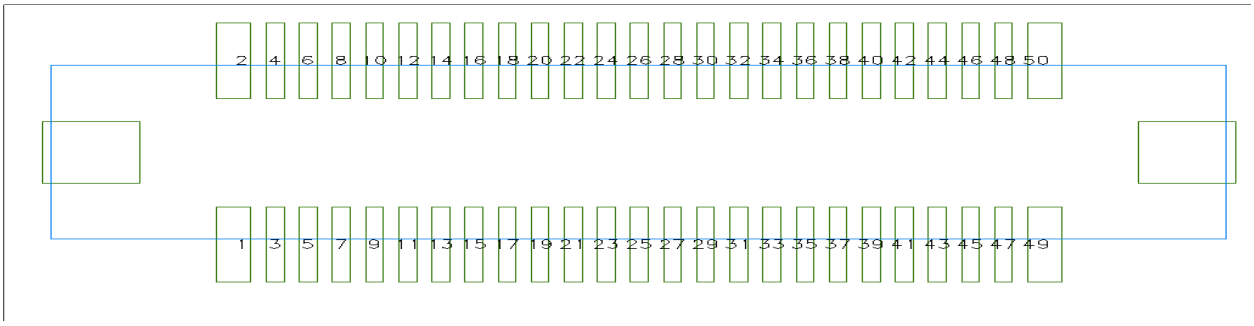

50-pin Module interface connector pin assignments (viewed looking down on connector)

Signal definitions of 50-pin Module interface connector

Pin #	Signal Name	Comment	Modem Signal Level	
1	VPH_PWR	Power to the CDMA transceiver	3.6 VDC min to 4.2 VDC max	Power input(6)
2	GND	Signal and power return	GROUND	
3	VPH_PWR	Power to the CDMA transceiver	3.6 VDC min to 4.2 VDC max	Power input(6)
4	GND	Signal and power return	GROUND	
5	VPH_PWR	Power to the CDMA transceiver	3.6 VDC min to 4.2 VDC max	Power input(6)
6	GND	Signal and power return	GROUND	
7	VPH_PWR	Power to the CDMA transceiver	3.6 VDC min to 4.2 VDC max	Power input(6)
8	GND	Signal and power return	GROUND	
9	VPH_PWR	Power to the CDMA transceiver	3.6 VDC min to 4.2 VDC max	Power input(6)
10	GND	Signal and power return	GROUND	
11	VEXT#	Indicates that external power is being used	0 to VPH_PWR max	Analog control
12	N/C	No connection		
13	N/C	No connection		
14	LED_EN#	Enable external LED	0 to VPH_PWR max	Analog control
15	N/C	No connection		
16	LED_DRV	External LED drive	10 mA LED drive	Analog output
17	N/C	No connection		

Signal definitions of 50-pin Module interface connector

Pin #	Signal Name	Comment	Modem Signal Level	
18	XCVR_DET	Indicates that transceiver is on		Digital output(2)
19	N/C	No connection		
20	N/C	No connection		
21	XCVR_EN#	CDMA transceiver primary power enable	0 to VPH_PWR max	Analog input
22	MSM_DP_TXD	UART1 - transmit data	V_{OH}(min) = 2.4V, V_{OL}(max) = 0.5V	Digital output(1)
23	MSM_DP_RXD	UART1 - receive data	V_{IH}(min) = 1.9V, V_{IL}(max) = 0.9V	Digital input(2)
24	MSM_DP_CTS#	UART1 - clear to send	V_{IH}(min) = 1.9V, V_{IL}(max) = 0.9V	Digital input(2)
25	MSM_DP_RTS#	UART1 - ready for receive	V_{OH}(min) = 2.4V, V_{OL}(max) = 0.5V	Digital output(1)
26	MSM_DP_DTR#	UART1 - data terminal ready	V_{IH}(min) = 1.9V, V_{IL}(max) = 0.9V	Digital input(2,3)
27	MSM_DP_RI#	UART1 - ring indicator	V_{OH}(min) = 2.4V, V_{OL}(max) = 0.5V	Digital output(1)
28	MSM_DP_DCD#	UART1 - data carrier detect	V_{OH}(min) = 2.4V, V_{OL}(max) = 0.5V	Digital output(1)
29	HS_PRES#	Headset detection input to MSM	V_{IH}(min) = 1.9V, V_{IL}(max) = 0.9V	Digital input(2,3)
30	GND	Signal and power return	GROUND	
31	MSM_DP_TXD2	UART2 - transmit data	V_{OH}(min) = 2.4V, V_{OL}(max) = 0.5V	Digital output(1)
32	MSM_DP_RXD2	UART2 - receive data	V_{IH}(min) = 1.9V, V_{IL}(max) = 0.9V	Digital input(2)
33	MSM_DP_CTS2#	UART2 - clear to send	V_{IH}(min) = 1.9V, V_{IL}(max) = 0.9V	Digital input(2)
34	MSM_DP_RTS2#	UART2 - ready for receive	V_{OH}(min) = 2.4V, V_{OL}(max) = 0.5V	Digital output(1)
35	GND	Signal and power return	GROUND	
36	CAR_SCL	Analog Carkit SCL line	V_{OH}(min) = 2.4V, V_{OL}(max) = 0.5V	Input/output
37	CAR_SDA	Analog Carkit SDA line	V_{OH}(min) = 2.4V, V_{OL}(max) = 0.5V	Input/output(1)
38	CAR_MIC+	Analog carkit microphone input	V_{IH}(min) = 1.9V, V_{IL}(max) = 0.9V	Analog input(2)
39	CAR_SPKR+	Analog Carkit Speaker output	V_{OH}(min) = 2.4V, V_{OL}(max) = 0.5V	Analog output(1)
40	GND	Signal and power return	GROUND	
41	HS_SPEAKER	Headset speaker audio output	1.5Vpp, 8.8mW into 32 ohm load	Analog output(1)
42	GND	Signal and power return	GROUND	

Signal definitions of 50-pin Module interface connector

Pin #	Signal Name	Comment	Modem Signal Level	
43	MAIN_MIC+	Main microphone positive input	1.8VDC nominal, -3Mv rms	Electret microphone input(4)
44	MAIN_MIC-	Handset microphone negative terminal	GROUND	
45	GND	Signal and power return	GROUND	
46	EAR_SPKR+	Main speaker positive audio output	1.2VDC nominal, 3V pp with pin 47	Bridge amp output(5)
47	EAR_SPKR-	Main speaker negative audio terminal	1.2VDC nominal, 3V pp with pin 46	
48	HS_MIC+	Headset microphone input	1.8VDC nominal, ~3Mv rms	Electret microphone input(4)
49	GND	Ground for headset microphone	GROUND	
50	LSPKR_ON	Loudspeaker amp control output	V_{OH}(min) = 2.4V, V_{OL}(max) = 0.5V	Digital output(2)

Notes:
1. Input connected directly to MSM. Do not exceed $V_{(max)}$ of 3.1V; damage to MSM may result.
2. Output connected directly to MSM. Do not exceed $V_{(max)}$ of 2.8V; damage to MSM may result.
3. 10K ohm pull-up resistor inside Module.
4. Input for standard electret microphone. 1.8V supplied via 2.2K ohm resistor inside Module.
5. Pins 46 and 47 are bridge (differential) amp outputs capable of driving 35 mW into a 32 ohm speaker connected between these pins.
6. 1200 mA required for full analog transmission capabilities.

16 Module Developer's Kit Schematic

This chapter contains schematic views of the current Module Developer's Kit (MDK), which is identified on the board as K4021. Kyocera Wireless Corp. has also produced limited quantities of an earlier version, identified as K4020. Differences between the two are listed below.

- The K4020 does not contain J14, VEXT_EN jumper.
- In the schematic for K4020, signal LED_EN# was labeled LED_EN.
- In the K4020, DS3 cathode is connected to ground and anode is connected to LED_DRV.
- In the K4020, R10 is 1.1 KΩ.

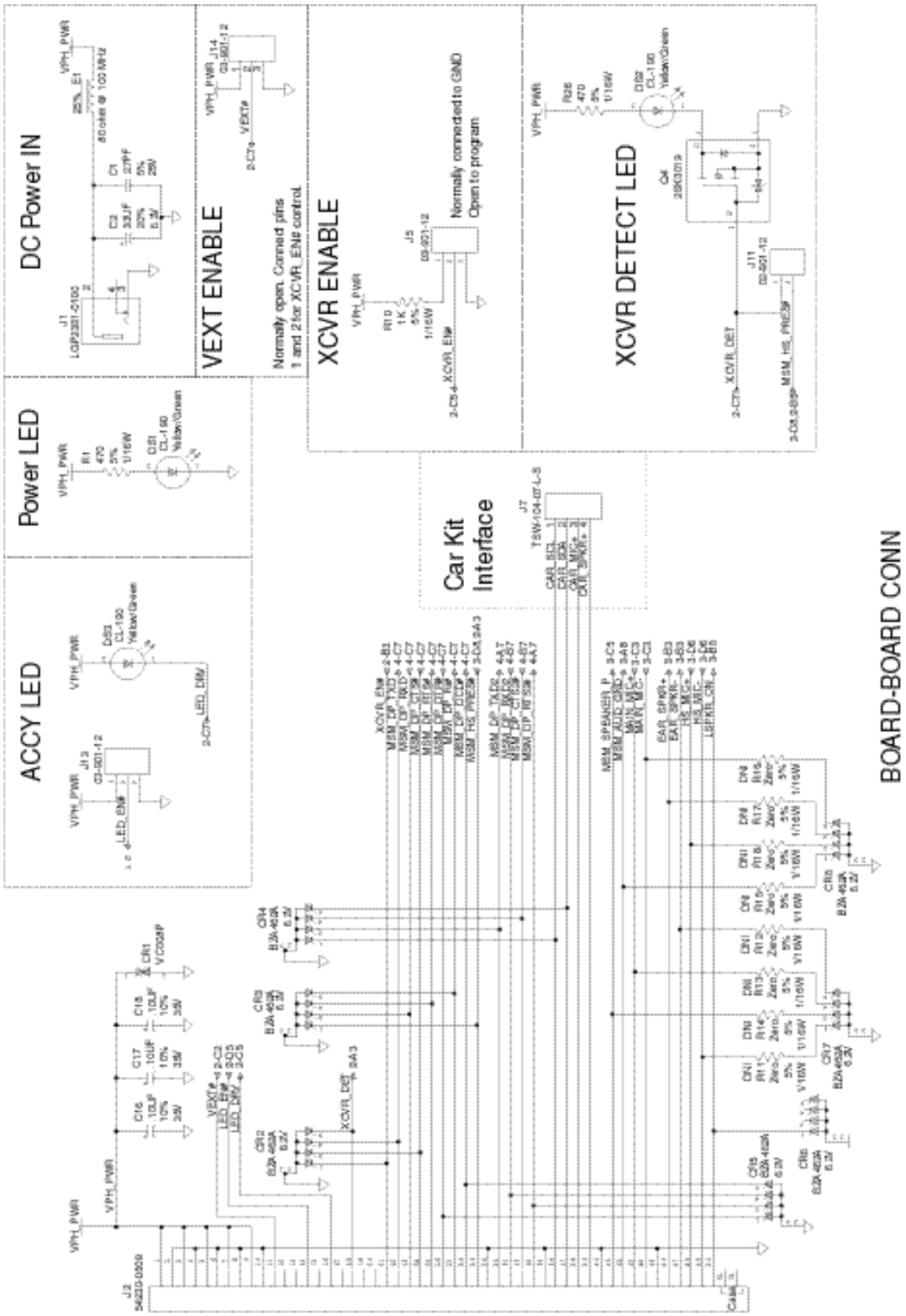
DC Power IN
VEXT ENABLE
XCVR ENABLE
XCVR DETECT LED
Power LED
ACCY LED
Car Kit Interface
BOARD-BOARD CONN
Normally open. Connect pins 1 and 2 for XCVR_EN# control.
Normally connected to GND
Open to program

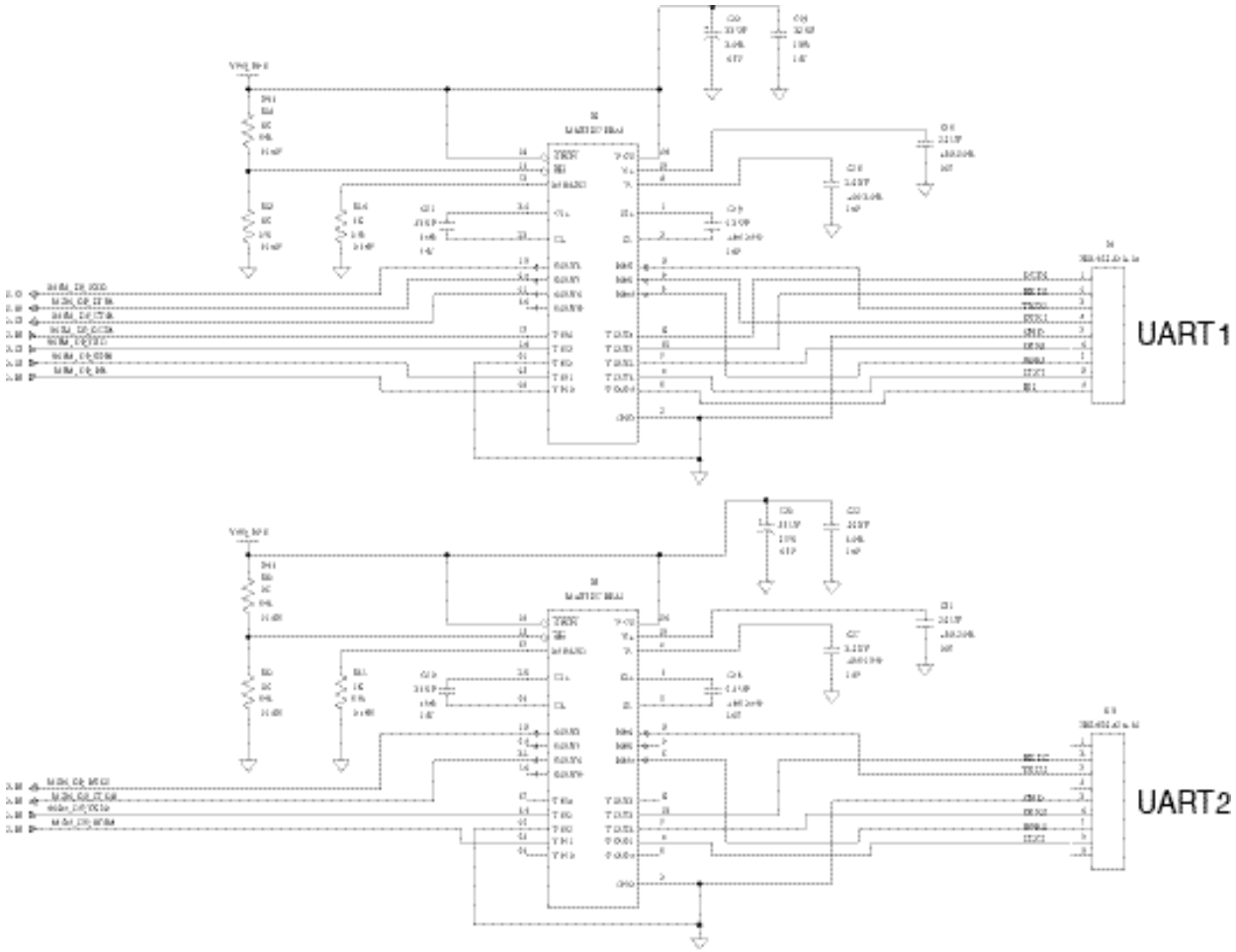

RS-232 CONVERSION ROOM

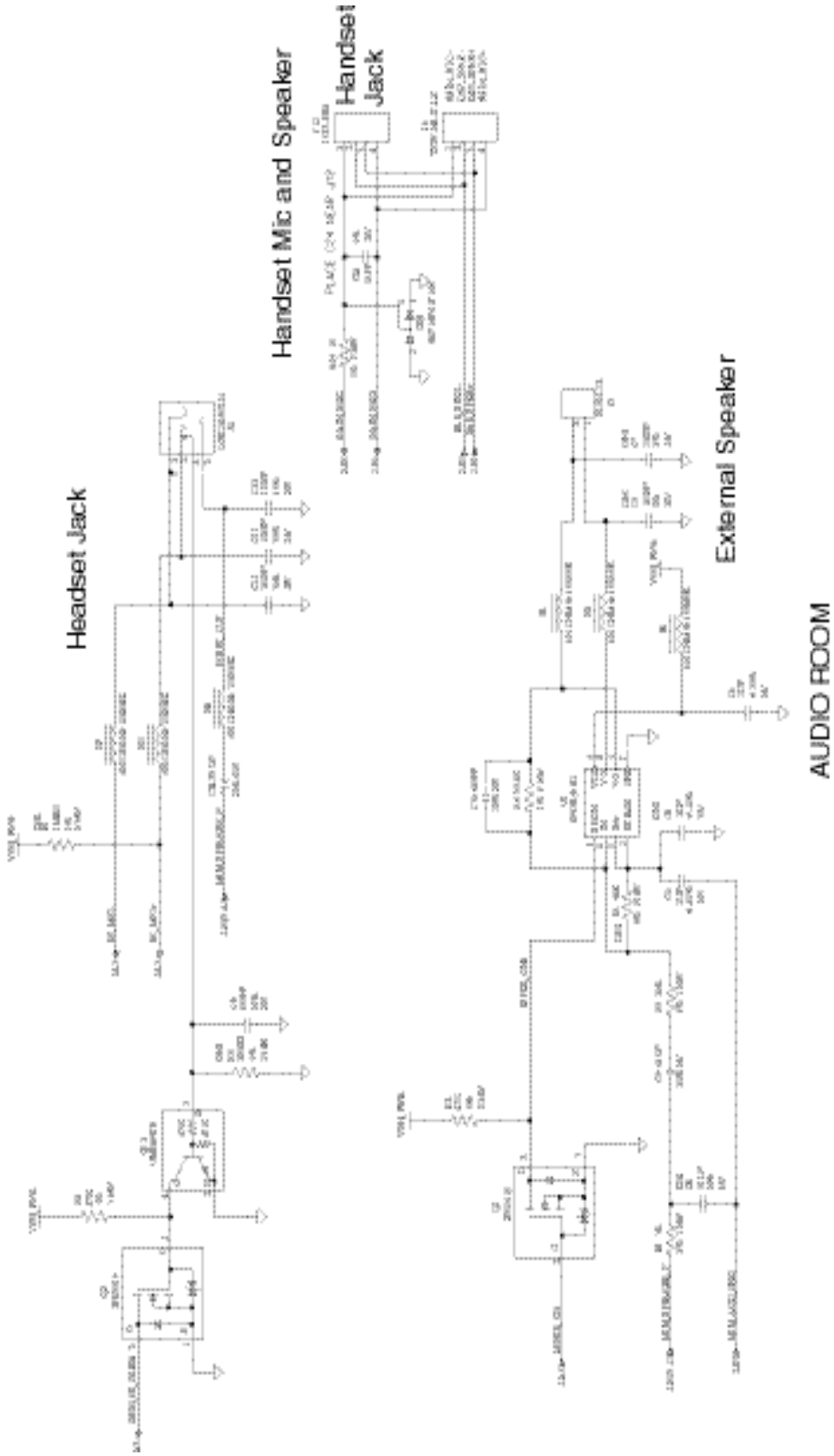
Headset Jack
Handset Mic and Speaker
Handset Jack
External Speaker
AUDIO ROOM

17 How to Set up Data Calls

This chapter explains how to set up your Module to make data calls using Microsoft Windows. Understanding these methods may help you integrate the Module with your Remote System.

The Module can make three types of data calls:

- Async data calls
- 1X packet data service
- QuickNet Connect (a packet-like data service)

Getting started

1. Verify that you have correctly set up your Module.
2. Ensure that Windows Dial-Up Networking or other point-to-point protocol (PPP) compatible dial-up software is installed on your computer.
3. Ensure that terminal emulation software such as HyperTerminal or ProComm™ is installed on your computer.
4. Connect a serial cable from the UART 1 on the CDMA Module Developer's Kit interface board to an enabled communications port of your computer.

Installing the Kyocera Wireless serial modem driver

From the CD-ROM, run the program Kyocera-Module.exe. The INF folder will automatically be copied to your hard drive and placed in the Windows folder.

Setting up your Module as a wireless modem

1. Open the Windows Control Panel and double-click the Modems or Phone and Modem Options icon.
2. Click Add to add a new modem. If you have a PCMCIA card slot, click Other and proceed to step 3. If you do not have a PCMIA card slot, go to step 3.
3. Click Don't detect my modem. Select Kyocera Wireless Corp. from the manufacturer list and select Kyocera CDMA High-Speed Wireless Modem.
4. Click Next.
5. Assign the modem to your configured COM port, then close Modem Properties.

Using terminal emulation software to talk to the modem in AT command mode

Set up the program for a new connection using the Kyocera CDMA High-Speed Wireless Modem driver or by pointing to the serial port to which the Module is connected with the following configuraiton.

Bits per second:	The default COM PORT SPEED of UART 1 is 115,200 bps
Data bits:	8
Parity:	None
Stop bits:	1
Flow control:	Hardware

Send AT commands to the Module to test the connection. The Module should respond to an ATZ command with OK.

Making an async data call using terminal emulation software

1. Open the connection in the terminal emulation software.
2. Use the ATDT command to dial the phone number of another modem.

Making an async data call using dial-up networking

1. Open Dial-up Networking.
2. Double-click the Make New Connection icon.
3. Type a name for your new connection.
4. Select the installed modem and click Next.
5. Type the area code and telephone number of your ISP and click Next, then Finish.
6. Right-click the New icon and select Properties.
7. From the Properties menu, configure Server Types for the appropriate options and protocols. To increase connection speed, uncheck Log on to network, NetBEUI, and IPX/SPX/Compatible.

Making a QuickNet Connect data call

1. Open the terminal mode of your terminal emulation software. Enter AT$QCQNC=1 and QC$QCMDR=2 for a QuickNet Connect call. Alternatively, configure the connection to bring up a terminal screen before dialing to enter the AT commands.
2. Open Dial-Up Networking.

3. Double-click the Make New Connection icon.
4. Type a name for your new connection.
5. Select your installed modem, then click Next.
6. Leave the area code blank and type #777 as the telephone number. Click Next, then Finish.
7. Right-click the New icon and select Properties.
8. Click Server Types and check TCP/IP. Uncheck Log on to network, NetBEUI, and IPX/SPX/Compatible.
9. You will need to get the name and password from the service provider to authenticate to their network.

Making a 1XRTT packet data call

1. Open the terminal mode of your terminal emulation software. Enter AT$QCQNC=0 and QC$QCMDR=3 for a 1XRTT call. Alternatively, configure the connection to bring up a terminal screen before dialing to enter the AT commands.
2. Open Dial-Up Networking.
3. Double-click the Make New Connection icon.
4. Type a name for your new connection.
5. Select your installed modem, then click Next.
6. Leave the area code blank and type #777 as the telephone number. Click Next, then Finish.
7. Right-click the New icon and select Properties.
8. Click Server Types and check TCP/IP. Uncheck Log on to network, NetBEUI, and IPX/SPX/Compatible.
9. You will need to get the name and password from the service provider to authenticate to their network.

Helpful hints

- Ensure that the phone or CDMA Module is turned on and the cables are firmly connected to a COM port.
- Ensure that the computer COM port is enabled and that no other equipment is attached to the COM port.
- Ensure that no other application that uses the COM port is running.

Troubleshooting

How do I get a phone number for my CDMA Module?

Contact your CDMA service provider for details. Once you have a phone number, use the Phone Support Toolkit to program it into your Module.

How can I obtain technical support?

You can call us in the U.S. and Canada at 888-236-2746 and outside North America at 858-882-1401. Our email address is module-support@kyocera-wireless.com.