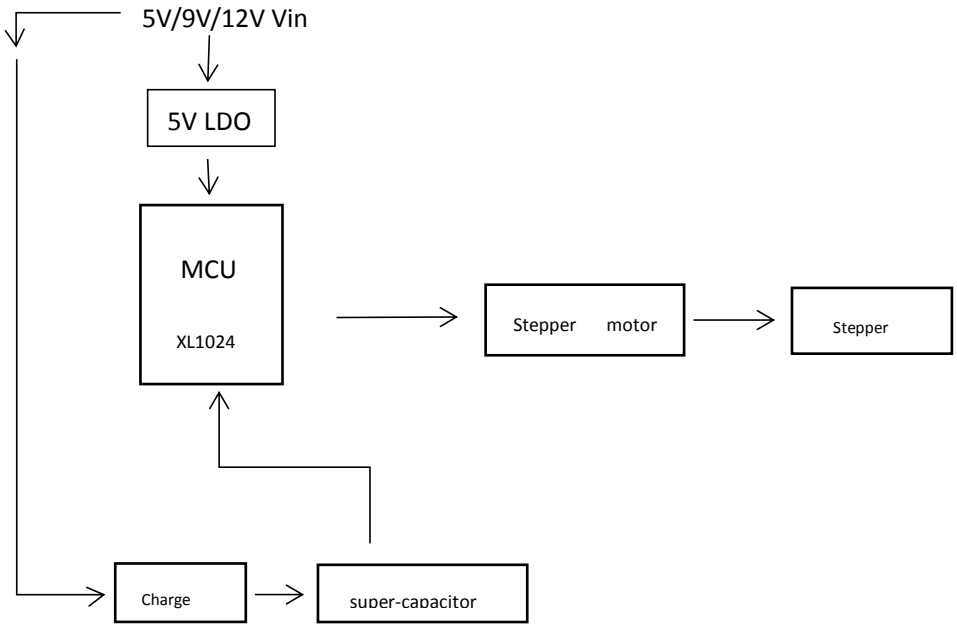
5V/9V/12V Vin
5V LDO
MCU
XL1024
Stepper motor
Stepper
Charge
super-capacitor

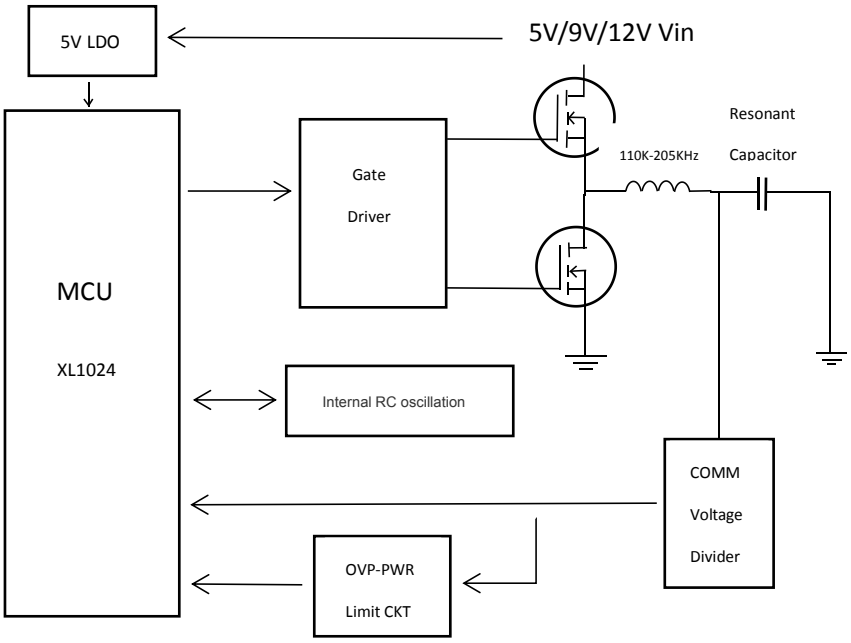
5V LDO
5V/9V/12V Vin
Resonant
Capacitor
110K-205KHz
Gate
Driver
MCU
XL1024
Internal RC oscillation
COMM
Voltage
Divider
OVP-PWR
Limit CKT