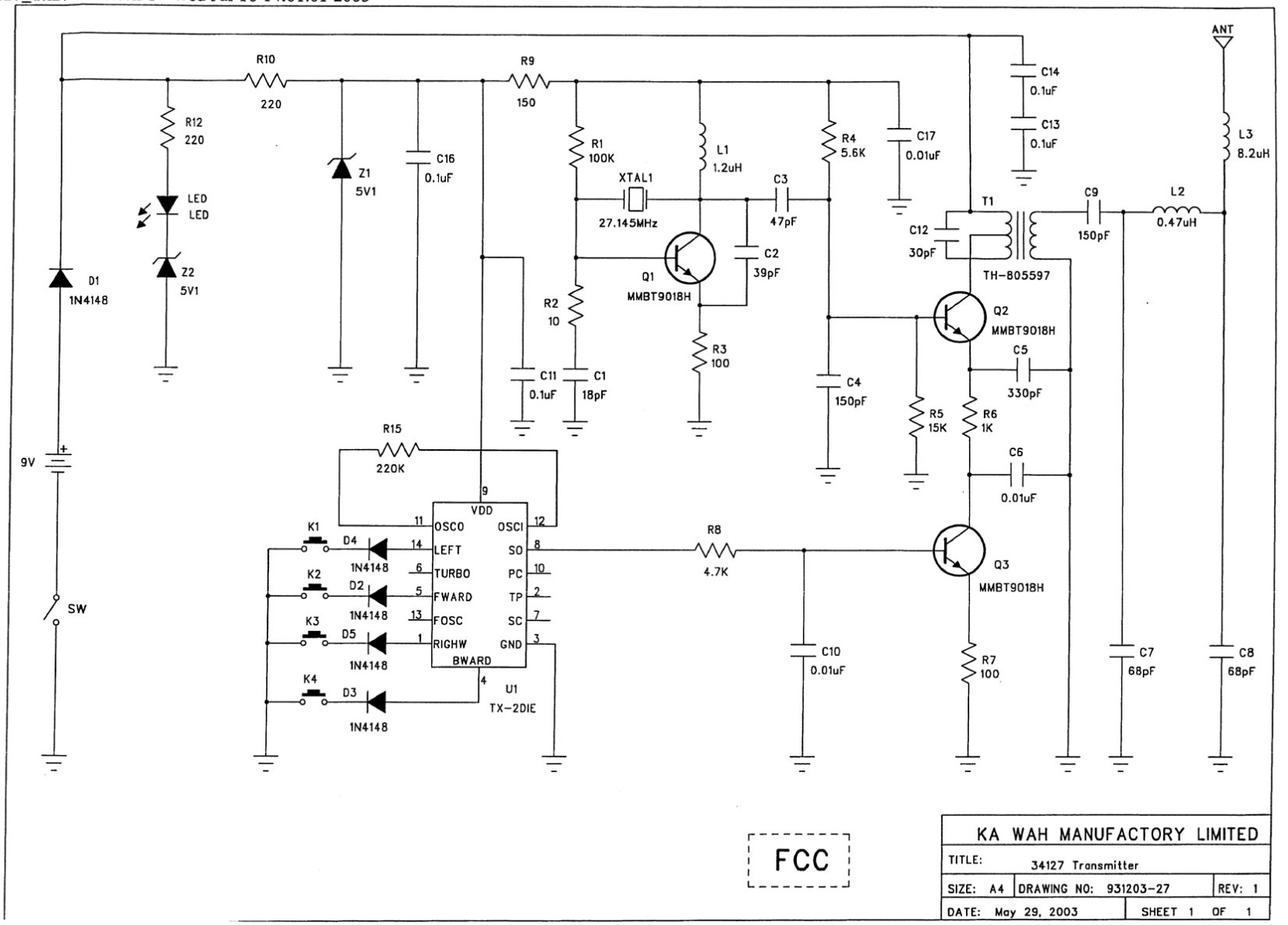34127_Tx27 FCC.sch-1 - Wed Jul 16 14:01:01 2003