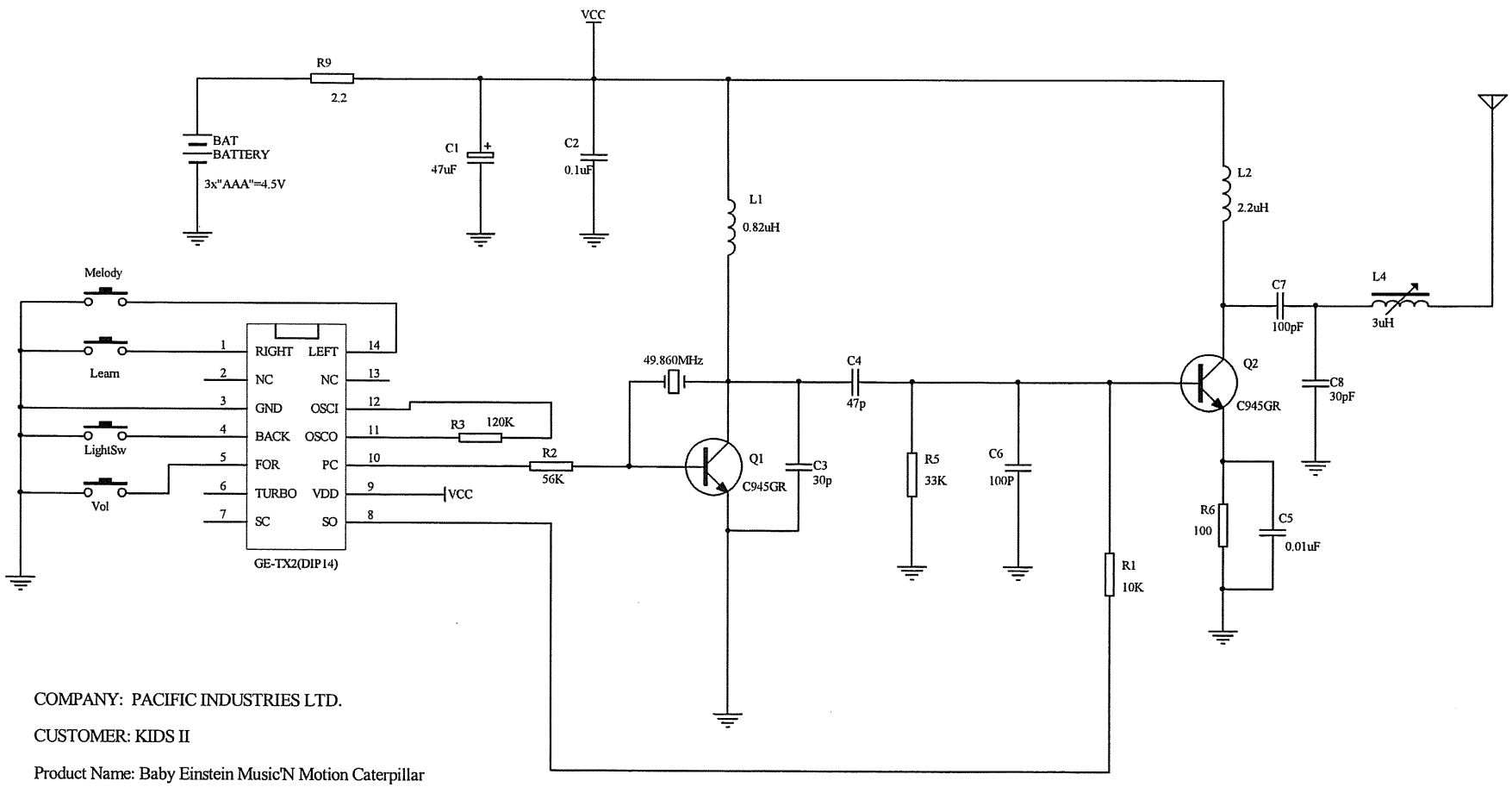

COMPANY: PACIFIC INDUSTRIES LTD.

CUSTOMER: KIDS II

Product Name: Baby Einstein Music'N Motion Caterpillar

Product No.: 30877

DATE:14-MAY-2007

49.860MHZ

Title	30877-TX	
Size A4	Number	Revision REV3
Date: 14-May-2007		Sheet of
File: D:\共用資料夾\0產品資料夾\KIDS II\30877\sub\B877V4-SONIX.ddb		

PDF created with pdfFactory Pro trial version www.pdffactory.com