PYROLOGIC 2000 SYSTEM

User Manual

Disclaimer

This documentation is provided for reference purposes only. While efforts were made to verify the completeness and accuracy of the information contained in this documentation, this documentation is provided "as is" without any warranty whatsoever and to the maximum extent permitted. Pyrologic disclaims all implied warranties, including without limitation the implied warranties of merchantability, non-infringement and fitness for a particular purpose, with respect to the same, Pyrologic shall not be responsible for any damages, including without limitation, direct, indirect, consequential or incidental damages, arising out of the use of, or otherwise related to, this documentation or any other documentation. Notwithstanding anything to the contrary, nothing contained in this documentation or any other documentation is intended to, nor shall have the effect of, creating any warranties or representations from Pyrologic.

To the maximum extent permitted by applicable law, in no event shall Pyrologic be liable for any damages whatsoever (including direct or indirect damages, loss of business profits, lost savings or other special, incidental, exemplary or consequential damages whether for breach of warranty, contract, strict liability, tort or otherwise) arising out of or resulting from the use of or inability to use the products and/or the enclosed written materials, even if Pyrologic have been advised of the possibility of such damages or of any claim by any third party. In any event, any liability of Pyrologic shall be limited to the purchase price of the product.

Warranty

Pyrologic warrants that the product will be free from defects in materials and workmanship after the date of purchase, for the period of one (1) year. If Pyrologic receives notice of such defects during the warranty period, Pyrologic will, at its option, either repair or replace products which prove to be defective. Replacement products may be either new or equivalent in performance to new.

Pyrologic does not warrant that the operation of Pyrologic products will be uninterrupted or error free. If Pyrologic is unable, within a reasonable time, to repair or replace any product to a condition as warranted, you will be entitled to a refund of the purchase price upon prompt return of the product.

This warranty does not cover products that have been modified, refurbished, remanufactured, misused, or tampered with in any way.

TO THE EXTENT ALLOWED BY LOCAL LAW, THE ABOVE WARRANTIES ARE EXCLUSIVE AND NO OTHER WARRANTY OR CONDITION, WHETHER WRITTEN OR ORAL, IS EXPRESSED OR IMPLIED AND PYROLOGIC SPECIFICALLY DISCLAIMS ANY IMPLIED WARRANTIES OR CONDITIONS OF MERCHANTABILITY, SATISFACTORY QUALITY, AND FITNESS FOR A PARTICULAR PURPOSE.

The FCC Wants You to Know

This equipment has been tested and found to comply with the limits for a Class B digital device, pursuant to Part 15 of the FCC rules. These limits are designed to provide reasonable protection against harmful interference in a residential installation. This equipment generates, uses and can radiate radio frequency energy and, if not installed and used in accordance with the instructions, may cause harmful interference to radio communications. However, there is no guarantee that interference will not occur in a particular installation. If this equipment does cause harmful interference to radio or television reception, which can be determined by turning the equipment off and on, the user is encouraged to try to correct the interference by one or more of the following measures:

a) Reorient or relocate the receiving antenna.
b) Increase the separation between the equipment and receiver.
c) Connect the equipment to an outlet on a circuit different from that to which the receiver is connected.
d) Consult the dealer or an experienced radio/TV technician.

FCC Warning

Modifications not expressly approved by the manufacturer could void the user authority to operate the equipment under FCC Rules.

Table of Contents

Introduction **1**

Foreword 1

System Components Definition 1

General information 1

Basic System Characteristics 2

Safety and Operational Instructions **3**

Getting started **4**

System Components 4

Terminal Unit 4

Terminal Unit Master Key 5

Base Unit 5

External PTT 6

Extension Unit 6

Remote Controlled Unit 7

Remote Controlled Unit- 16 7

Inserting Batteries 8

System Layout 8

Starting-up the System 9

Navigating the System 9

System Overview **11**

Event Programming 11

RCU Setting 12

Event Performing 12

Terminal Unit Menus **13**

Standby Screen 13

Main Settings Menu Screen 13

1. EVENTS CONTROL 14

1.1 SELECT EVENT 14

1.2 PROGRAM EVENT 14

1.3 CLEAR EVENT 16

1.4 CHOOSE EVENT 16

2. ADD UNITS 16

2.1 RCU X 1 17

2.2 RCU X 16 17
2.3 Test 1 SEC. 17

3. SET UNITS 18
3.1 SLEEP 18
3.2 WAKEUP 18
3.3 SET ALARM TIME 18

4. TU SETTINGS 19
4.1 INTENSITY 19
4.2 CLOCK 19
4.3 BACKLIGHT 20
4.4 PASSWORDS 20

Operating the System 22

Programming an Event 22
Select Event Number 22
Program Event Modes 23

Setting the XU 25

Setting the RCU devices 26
Add Units 26
Test RCUs 27

Performing an Event 27
When operating with an XU: 28
Preparations 28
Set RCUs Sleep State and Alarm 28
Select Event Number and Mode 29
Arm the System 30
Fire 31

Clearing An Event 33
Select Event Number and Mode 33
Clear the Event 33

Index 35

Quick Reference Guide 36

Introduction

Foreword

Congratulations for purchasing the Pyrologic 2000 wireless fireworks shooting system. We trust you will enjoy the unique features of this unparalleled system. The following instructions will familiarize you with the features and operation of this friendly system.

Thank you for choosing Pyrologic.

System Components Definition

- Terminal Unit (TU)
- Terminal Unit Master Key (MK)
- Base Unit (BU)
- Extension Unit (XU)
- External PTT (XPTT)
- Remote Controlled Unit (RCU)
- Remote Controlled Unit for controlling 16 extensions (RCU-16).

General information

Pyrologic 2000 is a wireless fireworks shooting system. Using a central remote control Terminal Unit (TU), a multitude of Remote Controlled Units (RCUs) are controlled by a coded Radio Frequency link in order to fire upon command a firework electrically connected to each RCU of choice.

The TU, either hand-held or installed into a Base Unit (BU), must be operated at a minimum height of 1.0 meter from ground. The RCU must be installed at a minimum height of 0.6 meter from ground. Under such conditions the effective range between the TU and any RCU is 65 meters.

By connecting an Extension Unit (XU) to the BU using a twisted pair 2 wire telephone cable with RJ11-2/6 connectors, the RCUs are controlled by the TU via the XU. The XU must be operated at a minimum height of 1.0 meter from ground. The RCU must be installed at a minimum height of 0.6 meter from ground. Under such conditions the effective range between the XU and any RCU is 65 meters.

Basic System Characteristics

The normal operating range of the Pyrologic-2000 system is 65 meters from TU to RCU. This range can be extended by connecting an XU to a BU to which a TU is mounted. When mounting TU to BU, an XPTT can be attached to the BU. The range extension is in accordance to the length of the extension cable of the XU connecting between the BU to the XU. The RCUs are assigned to the TU by individual programming communicated through the one-way RF link between TU and RCU. Subsequently the operation of the RCUs is controlled by the TU through a one-way RF link between TU and RCU, or alternatively by a wired link between the BU onto which the TU is mounted and the XU, continued by a one-way RF link between XU and RCU.

The system operates at the 418 MHz frequency and has been designed to comply with the applicable FCC regulations (pending approval).

Safety and Operational Instructions

The operation of fireworks or pyrotechnics when using the Pyrologic 2000 system is identical to operation using appropriate wiring instead of the RF command link. All applicable laws and regulations regarding fireworks operation must be strictly adhered.

When you purchase the system the RCUs are in generic state. The RCUs have to be assigned to a specific TU Master Key according to the instructions detailed in this manual.

When using the system for the first time and until you have learned to operate the system correctly, please attach LEDs instead of squibs to the RCU squib connections and otherwise operate the system according to the standard operation instructions, in order to verify that you have mastered each and every detail of system operation.

Under no circumstances open or tamper the system components. Warranty will void if any unauthorized attempt will be done to open or tamper system units.

Coping with External Transmission Disturbances: Pyrologic 2000 is a wireless system that is designed according to the FCC regulations. Please check the system to verify that there is no external interference. UNDER NO CIRCUMSTANCES THE SYSTEM WILL FIRE WITHOUT OPERATOR COMMAND.

Getting started

System Components

Terminal Unit

Front:

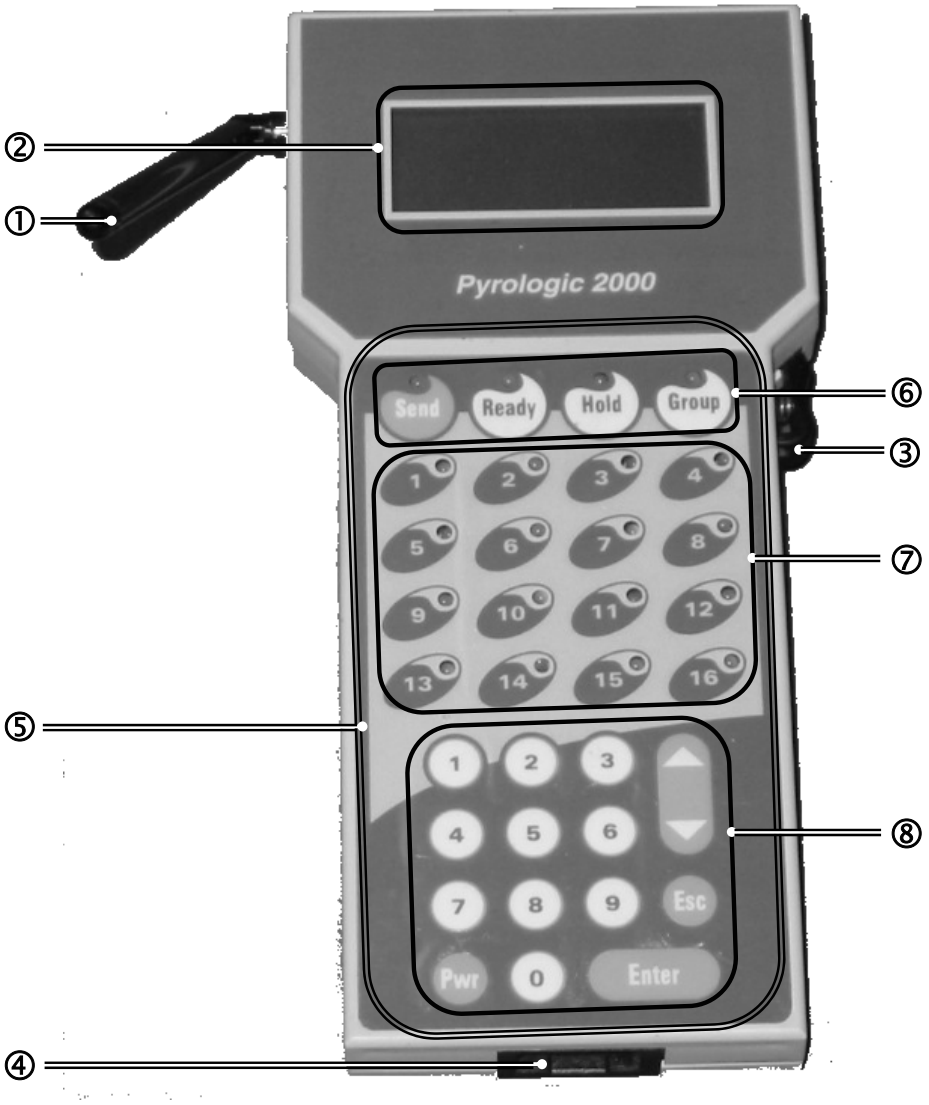

① **Foldable Antenna** - used for wireless communication with the RCUs.

② **Display** -

③ **Terminal Unit PTT Switch** - this switch must be pressed in order to transmit from the TU to the RCUs, whether to activate or test them.

④ **Master Key Socket** - here the Master Key, where all the information of the programmed events is stored, is inserted. The Master Key is transferable between TUs.

⑤ **Terminal Unit Panel** - includes the Command keys (⑥), the Activation keys (⑦) and the Programming keys (⑧).

⑥ **Command Keys with Command Key LEDs** - these keys are used to perform the firing.

⑦ **Activation Keys with Control LEDs** - these keys indicate the RCUs status, i.e., if the RCU is programmed in a specified group and event, if it is ready to fire, or if firing was performed. In manual mode, these keys are also used to fire an individual RCU. *These keys are not used for programming!*

⑧ **Programming Keys** - these keys are used to navigate and input values in the system. They include: Numeric Keys, and Scrolling, Esc, Enter and Pwr keys).

Back:

- **Base Unit Connector** - used for communication between the TU and the Base Unit.

The TU operates with four 1.5 Volt AA Alkaline batteries.

WARNING: Do not operate TU with rechargeable batteries.

The TU can operate as a stand-alone unit or in conjunction with the BU, XPTT and optionally also XU and external power supply.

Terminal Unit Master Key

The Master Key is were all the information of the programmed events is stored. You can transfer the Master Key between different TUs.

Base Unit

The base unit accommodates the terminal unit. The communication between the TU and the Base Unit is through mating connectors on the back of the TU and on the top of the BU. An external PTT is connectable to the side of the BU. External power can be connected to the BU by a regulated AC-DC adaptor connected to 120VAC 60 Hz input, providing to the BU its 7.5 VDC 500mA output.

Connecting an Extension Unit (XU) to the BU is done by using a twisted pair 2 wire telephone cable with RJ11-2/6 connectors, connected to the telephone sockets in both units.
Connecting an XPTT and an XU does not affect the function and operation procedures as described below. In terms of functionality, the XPTT replaces the TU PTT and the XU is an extension of the TU (transmission made through XU antenna instead of TU antenna).

External PTT

The external PTT (XPTT) is a joy-stick connecting to the BU.

Extension Unit

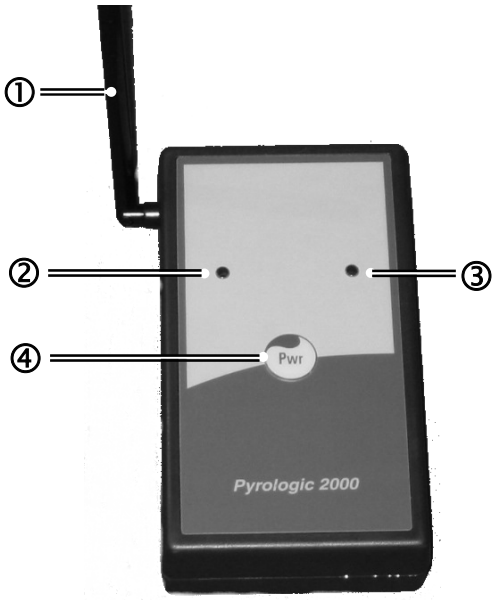

Front:

① **Foldable Antenna** - used for wireless communication with the RCU's.

② **Green LED** - together with the Red LED (④), used to indicate the XU state.

③ **Red LED** - together with the Green LED (③), used to indicate the XU state.

④ **Power Key** - used to switch the XU on or off.

Back:

- **Battery Bay**
- **Battery** - 9 Volt alkaline battery (Not Included)

When TU is installed onto BU and XU connected to BU, transmission will be done through the XU antenna only and not through the TU antenna.

Remote Controlled Unit

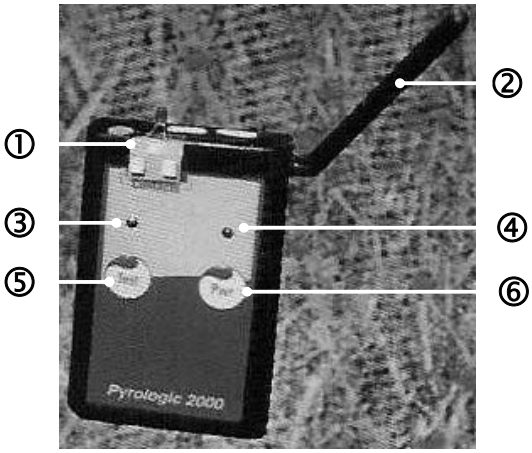

Front:

① **Squib Contacts** - are used to connect the squib to the RCU in order to operate it.
② **Foldable Antenna** - used for wireless communication with the TU.
③ **Green LED** - together with the Red LED (④), used to indicate the RCU state.
④ **Red LED** - together with the Green LED (③), used to indicate the RCU state.
⑤ **Test Key** - used to test the RCU, and together with the Power key, to set the RCU.
⑥ **Power Key** - used to switch the RCU on or off, and together with the Test key, to set the RCU.

Back:

- **Battery Bay with transparent cover**
- **Battery** - 9 Volt alkaline battery (Not Included)
- **Transparent foldable leg**

Remote Controlled Unit- 16

The Remote Control Unit - 16 includes the following elements:

- Front Panel with Green LED and Red LED and Test and Power Keys
- 16 Squib Contacts
- Foldable Antenna
- Battery Bay with transparent cover
- Battery (9 Volt alkaline battery - Not Included)
- Transparent foldable leg

Inserting Batteries

Insert batteries in the TU, in the XU and in the RCUs:

TU: Using screwdriver, open master screw to release cover. Insert 4 x 1.5 Volt AA Alkaline batteries. Re-install cover and tighten master screw using screw-driver.

XU: Open battery cover. Insert 9 Volt alkaline battery. Re-install battery cover.

RCU: Open transparent battery cover. Insert 9 Volt alkaline battery. Re-install transparent battery cover.

DO NOT USE RECHARGEABLE BATTERIES!

System Layout

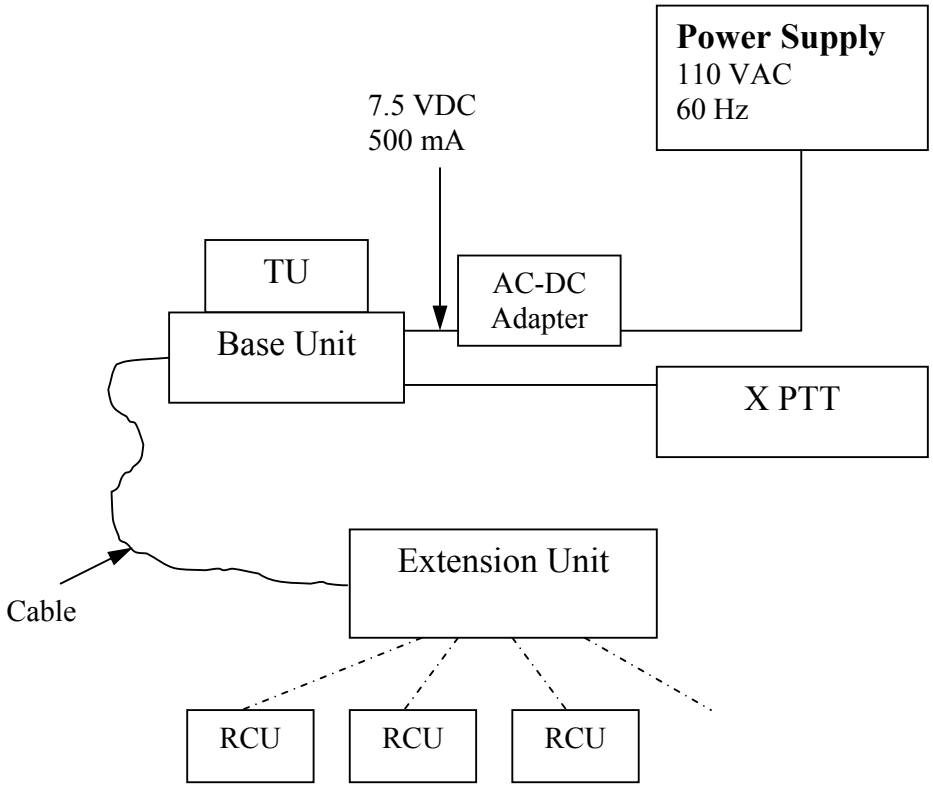

Starting-up the System

1. Insert Master Key into the TU.
2. Press the **Pwr** key on the TU. The standby screen will be displayed and the Command key LEDs will blink as follows:

Key LED	Color
Send	Red
Ready	Green
Hold	Red
Group	Green

```
 19:01:57
EVENT:1 GROUP:1
MODE:  MANUAL
```

3. Press **Esc**. You will be prompted to enter the password:

```
ENTER PASSWORD


    ________
```

Note: The factory default setting for Low level password is 00000000 and for High level password is 11111111. For further details about passwords, see page 20.

4. Enter the password and press **Enter**. The main settings menu will be displayed:

```
1.EVENTS CONTROL
2.ADD UNITS
3.SET UNITS
4.TU SETTINGS
```

The system is ready for operation.

Navigating the System

To select a menu item, you can use either the Numeric Keypad or the Scrolling Key. On the Numeric Keypad, press the number that corresponds to the menu item number. Or, scroll down or up using the Scrolling Key until the desired menu item number is highlighted and then press **Enter**.

To input a value in an entry, you can use either the Numeric Keypad or the Scrolling Key. On the Numeric Keypad, press the desired number, or use the Scrolling Key to raise/lower or change the current value. Press **Enter** to move to the next entry or **Esc** to move to the previous entry (if you are in the first entry, pressing **Esc** will return you to the previous screen).

When the TU is in the main settings menu screen or the standby screen, pressing **Esc** toggles between the two screens.

Main Settings Menu Screen

```
1.EVENTS CONTROL
2.ADD UNITS
3.SET UNITS
4.TU SETTINGS
```

Standby Screen

```
 19:01:57
EVENT:1 GROUP:1
MODE:  MANUAL
```

In any other menu screen, pressing **Esc** will return you to the previous screen.

System Overview

Working with the system consists of three steps:

- Programming an event
- Setting the RCU devices
- Performing an event

The first two steps are independent of each other. You can program an event and than set the RCU devices, or vice versa. Of course, you have to complete the first two steps before you can do the third.

Event Programming

You can program in the system up-to 8 events. Each event you can program in three different modes: manual, semi-automatic or automatic. This means that you can actually program 24 events – 8 events x 3 modes.

For each event number and mode you can assign up-to 8 groups of 16 Activation keys, which makes total of 128 Activation keys. Each Activation key can activate one RCU device or more. In the Terminal Unit (TU) screens, an Activation key is referred as **RCU**.

In **manual** mode, you activate the desired RCU device by selecting the appropriate group number and pressing the appropriate Activation key.

In **semi-automatic** mode, each RCU device is activated in the programmed sequence every time you press the **Send** key. In this mode, you can also activate an RCU device manually by selecting the appropriate group number and pressing the appropriate Activation key.

In **automatic** mode, each RCU device is activated in the programmed sequence and timing. In this mode you cannot activate the RCUs manually.

To clear an event, you can use the **CLEAR EVENT** option on the **EVENTS CONTROL** screen.

Note: In order to program or clear an event, you have to log into the system with High level password. The factory default setting for High level password is 11111111.

All the events data is stored in the Master Key. After programming all the desired events, you can transfer the Mater Key to another TU and perform the event from this TU.

For detailed instructions on programming events, see "Programming an Event" on page 22.

RCU Setting

Each RCU device has a unique ID which consists of an **RCU** (Activation key) number and a **GROUP** number. The RCU device will be activated by that, and only by that, combination of RCU number and group numbers, which were programmed in a specific Master Key.

Note: An RCU device will not be activated by the same RCU and group numbers that were programmed in another Master Key.

You can, though, set more than one RCU device to the same RCU and group number. In that case, those RCU devices will be activated simultaneously.

For detailed instructions on setting RCU devices, see "Setting the RCU devices" on page 26.

Event Performing

After programming an event (or events) and setting and testing the RCUs, you can position the RCUs and connect the fireworks or pyrotechnics.

If there is time left until the event, you can set the TU to go off and turn back on at a desired time, using the **SET ALARM TIME** option under **SET UNITS**. You can also put the RCUs in Sleep mode and wake them up when the time comes. This way you can extend batteries life.

To start an event, you have to select first the desired event number and mode that you programmed.

The event is controlled using the Command and Activation keys on the TU panel. A ready Activation key is indicated by green LED. Any RCU device that was activated, will be shut down automatically. On the TU, the Activation key LED of any activated device will turn from green to red.

Note: You must press the PTT in order to transmit from the TU to the RCUs, whether to activate or test them.

WARNING

When the system is in armed state, pressing the PTT and the Send key or an active Activation key (depending on the event mode) will cause the system to fire.

For detailed instructions on performing an event, see "Performing an Event" on page 27.

Terminal Unit Menus

This section describes the functionality, items, and options of all the menus in the Terminal Unit (TU).

If the TU is turned off, start-up the system as follows:

1. Press the **Pwr** key on the TU. The standby screen will be displayed.
2. Press **Esc**. You will be prompted to enter the password.
3. Enter the password and press **Enter**. The main settings menu will be displayed.

The system is ready for operation.

Note: For detailed description of the start-up procedure, see "Starting-up the System" on page 8.

Standby Screen

```
19:01:57
EVENT:1 GROUP:1
MODE:   MANUAL
```

Menu Options:
EVENT: 1 to 8
GROUP: 1 to 8
MODE: MANUAL, S-AUTO, AUTO

From this screen, you can start the firing procedure. The **EVENT** and **MODE** displayed on the screen depend on the selections you made in the **SELECT EVENT** and **CHOOSE EVENT** screens. For details, see "Select Event Number and Mode" on page 29.

Pressing **Esc** toggles between this screen and the main settings menu screen.

Main Settings Menu Screen

```
1.EVENTS CONTROL
2.ADD UNITS
3.SET UNITS
4.TU SETTINGS
```

From this screen, you can access all the menus and functions of the system for programming and setting events, adding and setting RCUs, and setting the system environment such as passwords, display brightness, clock etc.

Pressing **Esc** toggles between this screen and the standby screen.

1. EVENTS CONTROL

On the main settings menu, select **EVENTS CONTROL** to display the **EVENTS CONTROL** screen:

```
1.SELECT EVENT
2.PROGRAM EVENT
3.CLEAR EVENT
4.CHOOSE EVENT
```

From this screen you can select, program, clear and choose events.

All the event information is stored in the Master Key, which is transferable between Terminal Units.

1.1 SELECT EVENT

On the **EVENTS CONTROL** screen, select **SELECT EVENT** to display the **SELECT EVENT** screen:

```
 SELECT EVENT
Choose event
from 1 to 8
     1
```

Menu Options:
1 to 8

In this screen you can select the active event number (1 to 8) for programming, firing, or clearing. For each event you can program or choose Manual and/or Semi-automatic and/or Automatic mode.

1.2 PROGRAM EVENT

On the **EVENTS CONTROL** screen, select **PROGRAM EVENT**. If you logged into the system with Low level password, you will be prompted to enter the High level password.

Note: The factory default setting for High level password is 11111111.

After entering high level password, the following screen will be displayed:

```
1.PROGRAM AUTO
2.PROGRAM S-AUTO
3.PROGRAM MANUAL
```

In this screen you can select and set the event mode for the active event number you chose on the **SELECT EVENT** screen. For each event you can program Manual and/or Semi-automatic and/or Automatic mode.

1.2.1 PROGRAM AUTO

On the **PROGRAM EVENT** screen, select **PROGRAM AUTO** to display the **PROGRAM AUTO** screen:

```
GROUP 1 RCU 01 +
OLD         NEW
00   -Min-  00
00.0 -Sec-  01.0
```

Menu Options:
GROUP: 1 to 8
RCU: 01 to 16
Present: + or –
Min: 00 to 99
Sec: 00.0 to 59.8

In this screen, you can set the firing time of each RCU in a group, in minutes, seconds and tens of seconds. If it was programmed before, the old values are displayed under **OLD** for reference.

Note that in order for the RCU to function, it has to be set to **+**; otherwise it will not fire. When set as present (**+**), the appropriate Command Key LED goes on green.

1.2.2 PROGRAM S-AUTO

On the **PROGRAM EVENT** screen, select **PROGRAM S-AUTO** to open the **S-AUTO** screen:

```
GROUP        1
RCU         01
PRESENT      +
NUMBER      01
```

Menu Options:
GROUP: 1 to 8
RCU: 01 to 16
PRESENT: + or –
NUMBER: 1 to 128

In this screen, you can set the order of activation of each RCU in a group.

Note that in order for the RCU to function, it has to be set to **+**; otherwise it will not fire. When set as present (**+**), the appropriate Command Key LED goes on green.

1.2.3 PROGRAM MANUAL

On the **PROGRAM EVENT** screen, select **PROGRAM MANUAL** to open the **PROGRAM MANUAL** screen:

```
GROUP        1
RCU         01
PRESENT      +
```

Menu Options:
GROUP: 1 to 8
RCU: 01 to 16
PRESENT: + or –

In this screen, you can set the RCUs that will be fired manually.

Note that in order for the RCU to function, it has to be set to **+**; otherwise it will not fire. When set as present (**+**), the appropriate Command Key LED goes on green.

1.3 CLEAR EVENT

On the **EVENTS CONTROL** screen, select **CLEAR EVENT**. If you logged into the system with Low Level password, you will be prompted to enter the High Level password.

Note: The factory default setting for High Level Password is 11111111.

After entering high level password, the following screen will be displayed:

```
Event: 1 MANUAL

ENTER - to clear
ESC  - to cancel
```

Menu Options:
EVENT: 1 to 8
MANUAL, S-AUTO, AUTO

In this screen you can clear the active event number and mode. The **EVENT** number (1-8) and mode (MANUAL, S-AUTO, AUTO) displayed on the screen depend on the selections you made in the **SELECT EVENT** and **CHOOSE EVENT** screens. For details, see "Select Event Number and Mode" on page 29.

1.4 CHOOSE EVENT

On the **EVENTS CONTROL** screen, select **CHOOSE EVENT** to display the **CHOOSE EVENT** screen:

```
1.AUTO
2.S-AUTO
3.MANUAL
```

In this screen you can select the active event mode (AUTO, S-AUTO or AUTO) for programming, firing, or clearing. For each event you can program or choose Manual and/or Semi-automatic and/or Automatic mode.

2. ADD UNITS

On the main settings menu, select **ADD UNITS** to display the **ADD UNITS** screen:

```
1.RCU x 1
2.RCU x 16
3.TEST 1 SEC.
```

In this screen you can assign an address (group number and RCU number) to each RCU and also check the communication between the TU and RCUs.

2.1 RCU X 1

On the **ADD UNITS** screen, select **RCU X 1** to display the **RCU X 1** screen:

```
GROUP 1 RCU 01
```

Menu Options:
GROUP: 1 to 8
RCU: 01 to 16

In this screen, you can assign to each RCU device a **GROUP** number and an **RCU** number. For details, see "Setting the RCU devices" on page 26.

2.2 RCU X 16

On the **ADD UNITS** screen, select **RCU X 16** to display the **RCU X 16** screen:

```
GROUP 1
METHOD:
    ALL TOGETHER
```

Menu Options:
GROUP: 1 to 8
METHOD:
ALL TOGETHER or
ONE BY ONE

In this screen, you can assign to each RCU X 16 device a **GROUP** number and an **RCU** number. The RCU X 16 works as 16 different RCUs in one group.

Further details will be given in a separate manual.

2.3 Test 1 SEC.

On the **ADD UNITS** screen, select **TEST 1 SEC.** to display the **TEST 1 SEC.** screen:

```
ONE SECOND TEST

Hit ESC to exit
```

In this screen, you can test the communication between the TU and the RCUs. For details see "Test RCUs" on page 27.

3. SET UNITS

On the main settings menu, select **SET UNITS** to open the **SET UNITS** screen:

```
1.SLEEP
2.WAKEUP
3.SET ALARM TIME
```

In this screen, you can put the RCUs to "sleep", wake them up and set an alarm. For details, see "Set RCUs Sleep State and Alarm" on page 28.

3.1 SLEEP

On the **SET UNITS** screen, select **SLEEP** to display the **SLEEP** screen:

```
  RCUs to sleep
  ENTER active
  ESC Exit
```

In this screen, you can extend batteries life by putting the RCUs into Sleep mode.

3.2 WAKEUP

On the **SET UNITS** screen, select **WAKEUP** to display the **WAKEUP** screen:

```
  Wake up RCUs
  ENTER active
  ESC Exit
```

In this screen, you can wake up the RCUs if you put them in Sleep mode.

3.3 SET ALARM TIME

On the **SET UNITS** screen, select **SET ALARM TIME** to display the **SET ALARM TIME** screen:

```
   Set Alarm
-Hours-   -Min-
  20        12
  Alarm    Off
```

Menu Options:
Hours: 00 to 23
Min: 00 to 59
Alarm: On/Off

In this screen, you can set the TU to go off and turn back on at a desired time. When the TU turns back on, it sends a wakeup command to the RCUs. The RCUs will go into Standby state, with the red LED blinking.

Note: Before setting the alarm, make sure the system clock is set properly. For details about setting the system clock, see page 19.

4. TU SETTINGS

On the main settings menu, select **TU SETTINGS** to display the **TU SETTINGS** screen:

```
1. INTENSITY
2. CLOCK
3. BACKLIGHT
4. PASSWORDS
```

From this screen you can define TU preferences and settings such as display intensity, backlight activation, clock setup and passwords.

4.1 INTENSITY

From the **TU SETTINGS** screen, select **INTENSITY** to display the **INTENSITY** screen:

```
Choose   Level
From  1  to  9
      1
```

Menu Options:
1 to 9

In this screen, you can set the display intensity. Select the desired intensity level between 1 to 9 and press **Enter**.

4.2 CLOCK

From the **TU SETTINGS** screen, select **CLOCK** to display the **SET CLOCK** screen:

```
  SET CLOCK
-Hours-  -Min-
  18       44
```

Menu Options:
Hours: 00 to 23
Min: 00 to 59

In this screen, you can set the time. Setting the time is particularly important when setting the alarm.

4.3 BACKLIGHT

From the **TU SETTINGS** screen, select **BACKLIGHT** to display the **BACKLIGHT** screen:

```
1.OFF
2.ON PTT OR KEY
3.ALLWAYS
```

In this screen, you can set when the backlight will be activated.

4.4 PASSWORDS

The system has two levels of passwords, High and Low. The High level password allows you to access all the menus. With the Low level password you cannot access the **PROGRAM EVENT** and the **CLEAR EVENT** screens.

From the **TU SETTINGS** screen, select **PASSWORDS** to display the **PASSWORDS** screen:

```
1.HIGH
2.LOW
```

In this screen, you can select which password to set, High or Low.

4.4.1 HIGH

From the **PASSWORDS** screen, select **HIGH** to display the **HIGH PASSWORD** screen:

```
 HIGH  PASSWORD
OLD   11111111

NEW   ________
```

In this screen you can set the High level password. The factory default setting for High level password is 11111111.

4.4.2 LOW

From the **PASSWORDS** screen, select **LOW** to display the **LOW PASSWORD** screen:

```
 LOW  PASSWORD
 OLD  00000000

 NEW  ________
```

In this screen you can set the Low level password. The factory default setting for Low level password is 00000000. Note that with Low level password you cannot access the **PROGRAM EVENT** and the **CLEAR EVENT** screens.

Operating the System

Note: Before operating the system, make sure the TU and RCUs have batteries. For details, see page 8.

If the TU is turned off, start-up the system as follows:

1. Press the **Pwr** key on the TU. The standby screen will be displayed.
2. Press **Esc**. You will be prompted to enter the password.
3. Enter the password and press **Enter**. The main settings menu will be displayed.

The system is ready for operation.

Note: For detailed description of the start-up procedure, see "Starting-up the System" on page 8.

Programming an Event

Note: For details about navigating, selecting options and entering values, see "Navigating the System" on page 9.

Select Event Number

The first step in programming an event is selecting the active event number. This will be the event number that you will program. There are 8 events available.

1. In the main settings menu, select **EVENTS CONTROL**. The **EVENTS CONTROL** screen will be displayed:

```
1.SELECT EVENT
2.PROGRAM EVENT
3.CLEAR EVENT
4.CHOOSE EVENT
```

2. Select **SELECT EVENT**. The **SELECT EVENT** screen will be displayed:

```
 SELECT EVENT
Choose event
 From 1 to 8
      1
```

3. Select an event number (from 1 to 8), and press **Enter**. The **EVENTS CONTROL** screen will be displayed again.

Program Event Modes

After selecting the event number to program, you have to select which of the three different modes you want to program for the event: manual, semi-automatic or automatic.

1. Select **PROGRAM EVENT**.

Note: If you logged into the system with Low Level password, you will be prompted to enter the High Level password.

The factory default setting for High level password is 11111111. For further details about passwords, see page 20.

The **PROGRAM EVENT** screen will be displayed:

```
1.PROGRAM AUTO
2.PROGRAM S-AUTO
3.PROGRAM MANUAL
```

2. Select the desired mode you want to program and follow the instructions below according to your selection.

IMPORTANT: *Note that there is no correlation between the events with the same number belonging to different modes. For example, you might choose to program RCUs 1, 3, 5 and 8 in Group 1 in Event 1 in Manual mode; RCUs 4, 12 and 15 in Group 1 in Event 1 in Semi-Automatic mode; and RCUs 4-13, 15 and 16 in Group 1 in Event 1 in Automatic Mode. When performing an event, the TU will send firing commands only to the RCUs which have been programmed for the specific event.*

1. PROGRAM AUTO

If you want to program the automatic mode, select **PROGRAM AUTO** in the **PROGRAM EVENT** screen. The following screen will be displayed:

```
GROUP 1 RCU 01 +
OLD         NEW
00   -MIN-  00
00.0 -SEC-  00.0
```

Options:
GROUP: 1 to 8
RCU: 01 to 16
PRESENT: + or –
Min: 0 to 99
Sec: 0.0 to 59.8

1. Select the **GROUP** number, between 1 to 8, and press **Enter** to move to the next entry.

2. Select the **RCU** number, between 1 to 16, and press **Enter** to move to the next entry.
3. Select **+** using the Scroll key. The corresponding Activation key will blink green. Press **Enter** to move to the next entry.
4. Set the minutes and press **Enter** to move to the next entry.
5. Set the seconds and press **Enter** to move to the next entry.
6. Set the tens of seconds (in intervals of 2) and press **Enter**. The system will increment the RCU number by one and will be ready to start programming the next RCU.

Note: Under **OLD**, you can see the previously programmed values for the minutes and the seconds.

When you are done programming all the desired RCUs in that mode, press **Esc** to return to the **PROGRAM EVENT** screen. Now you can program another event mode, or press **Esc** again to return to the **EVENTS CONTROL** screen.

2. PROGRAM S-AUTO

If you want to program the semi-automatic mode, select **PROGRAM S-AUTO** in the **PROGRAM EVENT** screen. The following screen will be displayed:

```
GROUP        1
RCU         01
PRESENT      +
NUMBER      01
```

Options:
GROUP: 1 to 8
RCU: 01 to 16
PRESENT: + or –
Number: 1 to 128

1. Select the **GROUP** number, between 1 to 8, and press **Enter** to move to the next entry.
2. Select the **RCU** number, between 1 to 16, and press **Enter** to move to the next entry.
3. Select **+** using the Scroll key. The corresponding Activation key will blink green. Press **Enter** to move to the next entry.
4. For **NUMBER** select a value, between 1 and 128, for the order of activation in the semi-automatic sequence, and press **Enter**. The system will increment the RCU number by one and will be ready to start programming the next RCU.

When you are done programming all the desired RCUs in that mode, press **Esc** to return to the **PROGRAM EVENT** screen. Now you can program another event mode, or press **Esc** again to return to the **EVENTS CONTROL** screen.

3. PROGRAM MANUAL

If you want to program the manual mode, select **PROGRAM MANUAL** in the **PROGRAM EVENT** screen. The following screen will be displayed:

```
GROUP        1
RCU         01
PRESENT      +
```

Options:
GROUP: 1 to 8
RCU: 01 to 16
PRESENT: + or –

1. Select the **GROUP** number, between 1 to 8, and press **Enter** to move to the next entry.
2. Select the **RCU** number, between 1 to 16, and press **Enter** to move to the next entry.
3. Select **+** using the Scroll key. The corresponding Activation key will blink green. Press **Enter**. The system will increment the RCU number by one and will be ready to start programming the next RCU.

When you are done programming all the desired RCUs in that mode, press **Esc** to return to the **PROGRAM EVENT** screen. Now you can program another event mode, or press **Esc** again to return to the **EVENTS CONTROL** screen.

Setting the XU

Place XU on tripod normally 60 cm above ground, with its front/rear sides in vertical position, laying on the longer side, with the antenna in upright position.

Press lengthily the **Pwr** key on the XU. For two seconds you will get one of the following: green LED will light indicating that battery is OK or if battery is weak green and red LED's will light, or red LED will light will indicate that you must replace battery. After replacing battery if necessary, press **Pwr** key again and repeat procedure.

Green and red LED's will blink for 3 seconds. This indicates that the XU is in STANBY state.

During XU operation:
The greed LED will blink every 4 seconds. (If there is no communication the red LED will blink instead the green LED). During XU transmission the red LED will blink.

XU self-test:
Press XU **Pwr** key shortly. The XU will conduct a self test and if XU is in proper condition the two LED's will light for a shoet time.

For turning XU off, press and hold the **Pwr** key and wait until the two LED's go on permanently, then release the **Pwr** key

Setting the RCU devices

If the TU is turned off, start-up the system as follows:

1. Press the **Pwr** key on the TU. The standby screen will be displayed.
2. Press **Esc**. You will be prompted to enter the password.
3. Enter the password and press **Enter**. The main settings menu will be displayed.

The system is ready for operation.

Note: For detailed description of the start-up procedure, see "Starting-up the System" on page 8.

Add Units

To set an RCU device, first you have to select the group and RCU (Activation key) number in the TU.

1. In the main settings menu screen on the TU, select **ADD UNITS**. The following screen will be displayed:

```
1.RCU x 1
2.RCU x 16
3.TEST 1 SEC.
```

2. Select **RCU X 1**. The following screen will be displayed:

```
GROUP 1 RCU 01
```

Options:
GROUP: 1 to 8
RCU: 01 to 16

3. Select the **GROUP** number, between 1-8, and press **Enter**.
4. Select the **RCU** number, between 1 and 16 (do not press **Enter** yet).

Note: On the RCU device, make sure a 9 volt battery is installed and that the POWER IS OFF.

5. On the RCU device, press and hold the **Test** key and press the **Pwr** key. First, the Green LED will go on, then the Red LED will go on and then both LEDs will blink intermittently, indicating that the RCU is in programming mode.
6. On the TU, press **Enter**. Both RCU LEDs will blink together for 1 second, and than the RCU device power will go off. The RCU address has been set.

7. Write down the address and insert it into RCU battery bay, visible through transparent cover.

Repeat this procedure for each of the RCUs.

Test RCUs

In order to check proper communication between the TU and the RCUs, and that all the RCUs are operating properly, perform a test procedure.

1. Place each RCU device in position, normally 60 cm above ground for full range.
2. Press the **Pwr** key on the RCU – green LED will light indicating that battery is OK. (In case that red light is on at Power On, replace battery, press **Pwr** key again and repeat procedure). Green LED will go off automatically. Red light will blink. This indicates that the RCU is in STANBY state.
3. Go to the main settings menu screen in the TU.
4. Select **ADD UNIT**. The following screen will be displayed:

```
1.RCU x 1
2.RCU x 16
3.TEST 1 SEC.
```

5. Select **Test 1 SEC.**.
6. Leave TU in place and check each individual RCU. When Red and Green LEDs are blinking together, it indicates that there is communication between the TU and the RCU.
7. After checking that the communication between the TU and RCUs is OK, go to the TU and press **Esc**. RCUs will be in STANDBY state with red light blinking.

Performing an Event

If the TU is turned off, start-up the system as follows:

1. Press the **Pwr** key on the TU. The standby screen will be displayed.
2. Press **Esc**. You will be prompted to enter the password.
3. Enter the password and press **Enter**. The main settings menu will be displayed.

The system is ready for operation.

Note: For detailed description of the start-up procedure, see "Starting-up the System" on page 8.

When operating with an XU:

For System layout see "System Layout" on page 8.

Place XU on tripod normally 60 cm above ground, with its front/rear sides in vertical position, laying on the longer side, with the antenna in upright position.

Press lengthily the **Pwr** key on the XU. For two seconds you will get one of the following: green LED will light indicating that battery is OK or if battery is weak green and red LED's will light, or red LED will light will indicate that you must replace battery. After replacing battery if necessary, press **Pwr** key again and repeat procedure.

Green and red LED's will blink for 3 seconds. This indicates that the XU is in STANBY state.

During XU operation:
The greed LED will blink every 4 seconds. (If there is no communication the red LED will blink instead the green LED). During XU transmission the red LED will blink.

XU self-test:
Press XU **Pwr** key shortly. The XU will conduct a self test and if XU is in proper condition the two LED's will light for a shoet time.

For turning XU off, press and hold the **Pwr** key and wait until the two LED's go on permanently, then release the **Pwr** key

Preparations

1. Connect squib/electric match-head to the RCU.
2. Press the **Test** key on the RCU.
3. If green LED lights, the circuit is OK. If the Red LED lights, circuit is not functional – change the squib.
4. Connect the squib to the consumer/shell.

Set RCUs Sleep State and Alarm

This step is optional.

Sleep

If there is time left until the event, you can put the RCUs into sleep state to extend batteries life.

1. At the TU main settings menu, select **SET UNITS** menu.
2. In the **SET UNITS** menu, select **SLEEP**.

The TU will send the RCUs a SLEEP command. The RCUs will go into sleep state, with the green and red LEDs blinking together every 5 seconds.

Wakeup

If you want to wake up the sleeping RCUs, and the TU power is not turned off:

1. At the TU main settings menu, select **SET UNITS** menu.
2. In the **SET UNITS** menu, select **WAKE-UP**.

The TU will send the RCUs a WAKEUP command. The RCUs will go into Standby state, with the red LED blinking.

If the TU power has been turned off, you will wake up the sleeping RCUs by turning the TU power on. The TU will send the RCUs a WAKEUP command. The RCUs will go into Standby state, with the red LED blinking.

Alarm

If there is time left until the event, you can set the TU to go off and turn back on at a desired time. When the TU turns back on, it sends a wakeup command to the RCUs. The RCUs will go into Standby state, with the red LED blinking.

Note: Before setting the alarm, make sure the system clock is set properly. For details about setting the system clock, see page 19.

1. In the TU main settings menu, select **SET UNITS**.
2. In the **SET UNITS** screen, select **SET ALARM TIME**. The following screen will be displayed:

```
  SET ALARM
-Hours-  -Min-
  00       00
  Alarm   Off
```

3. Set the desired alarm time.

Select Event Number and Mode

In order to perform a fireworks/pyrotechnics display, you have to select the desired event number and mode.

1. On the main settings menu, select **EVENTS CONTROL**. The **EVENTS CONTROL** screen will be displayed:

```
1.SELECT EVENT
2.PROGRAM EVENT
3.CLEAR EVENT
4.CHOOSE EVENT
```

2. Select **SELECT EVENT** from the **EVENTS CONTROL** screen. The **SELECT EVENT** screen will be displayed:

```
 SELECT EVENT
Choose event
from 1 to 8
     1
```

3. Select the desired event number and press **Enter**. The **EVENTS CONTROL** screen will be displayed again.
4. From the **EVENTS CONTROL** screen, select **CHOOSE EVENT**. The following screen will be displayed:

```
1.AUTO
2.S-AUTO
3.MANUAL
```

5. Select the desired event mode for the selected event number.
6. Press **Esc** three times to display the standby screen.

Arm the System

Press the **Ready** key. The display will count down 7 seconds. During this time the command LEDs will blink as follows:

Key LED	Color
Send	Red
Ready	Red
Hold	Green
Group	Green

After elapsing of the 7 seconds, the command LEDs will blink as follows:

Key LED	Color
Send	Green
Ready	Red
Hold	Green
Group	Green

This indicates that the TU has sent the arming command to the RCUs. On the RCUs, the green light will blink. This indicates that the RCUs are in armed state.

WARNING

The system is in armed state. In semi-automatic or automatic mode, pressing the PTT and the Send key will cause the system to fire. In manual mode, pressing the PTT and any of the active 1-16 Activation keys (indicated by green LED) will cause the system to fire.

Fire

Depending on the event mode you chose on "Select Event Number and Mode" (page 29) – manual, semi-automatic or automatic – perform the following instructions.

Note: You must press the PTT in order to transmit from the TU to the RCUs.

Manual Mode Firing

1. If you chose manual mode, the display will be as follows:

```
 20:17:10
EVENT:1  GROUP:1
MODE:  MANUAL
```

Options:
EVENT: 1 to 8
GROUP: 1 to 8

2. Choose the desired Group. You can increment the group number by 1 by pressing the **Group** key. When current Group number is 8, pressing the **Group** key will return the group number to 1.
3. Press the PTT and press any of the active Activation keys (LED green). The firework will fire. Any activated RCU will be shut down automatically. On the TU, the Activation key LED of any activated unit will turn from green to red.

To stop the event press **Hold**. The TU will send a disarm command to the RCUs. Any RCU that hasn't received yet a firing command will return to Standby state with the red light blinking. The command key LEDs will blink as follows:

Key LED	Color
Send	Red
Ready	Green
Hold	Red
Group	Green

Semi-Automatic Mode Firing

1. If you chose semi-automatic mode, the display will be as follows:

```
 20:17:10
EVENT:1  GROUP:1
MODE:  S-AUTO
```

Options:
GROUP: 1 to 8

2. Press the PTT and press the **Send** key. A firework will fire in the pre-programmed order every time you press the **Send** key. Any activated RCU will be shut down automatically. On the TU, the Activation key LED of any activated unit will turn from green to red.

To stop the event press **Hold**. The TU will send a disarm command to the RCUs. Any RCU that hasn't received yet a firing command will return to Standby state with the red light blinking. The command key LEDs will blink as follows:

Key LED	Color
Send	Red
Ready	Green
Hold	Red
Group	Green
Activation Keys	

Automatic Mode Firing

1. If you chose semi-automatic mode, the display will be as follows:

Time from start

```
 20:17:10
GROUP 1  RCU 01
##:##.# ##:##.#
AVAIL:   ##
```

Time left

2. Press the PTT and press the **Send** key. As long as you hold the PTT, the fireworks will fire in the pre-programmed order and timing. Any activated RCU will be shut down automatically. On the TU, the Activation key LED of any activated unit will turn from green to red.

To stop the event, release the PTT and press **Hold**. The TU will send a disarm command to the RCUs. Any RCU that hasn't received yet a firing command will return to Standby state with the red light blinking. The command key LEDs will blink as follows:

Key LED	Color
Send	Red
Ready	Green
Hold	Red
Group	Green
Activation Keys	

Clearing An Event

Select Event Number and Mode

In order to clear an event, first you have to select the event number and mode you want to clear.

1. On the main settings menu, select **EVENTS CONTROL**. The **EVENTS CONTROL** screen will be displayed:

```
1.SELECT EVENT
2.PROGRAM EVENT
3.CLEAR EVENT
4.CHOOSE EVENT
```

2. Select **SELECT EVENT** from the **EVENTS CONTROL** screen. The **SELECT EVENT** screen will be displayed:

```
 SELECT EVENT
Choose event
from 1 to 8
     1
```

3. Select the desired event number and press **Enter**. The **EVENTS CONTROL** screen will be displayed again.
4. From the **EVENTS CONTROL** screen, select **CHOOSE EVENT**. The following screen will be displayed:

```
1.AUTO
2.S-AUTO
3.MANUAL
```

5. Select the desired event mode for the selected event number.
6. Press **Esc** to display the **EVENTS CONTROL** screen.

Clear the Event

1. Select **CLEAR EVENT** from the **EVENTS CONTROL** screen. If you logged into the system with Low Level password, you will be prompted to enter the High Level password.

Note: The factory default setting for High Level Password is 11111111.

The **CLEAR EVENT** screen will be displayed:

```
Event: 1 MANUAL

ENTER - to clear
ESC  - to cancel
```

Menu Options:
EVENT: 1 to 8
MANUAL, S-AUTO, AUTO

2. Press **Enter** to clear that event number and mode, or **Esc** to cancel.

Index

A

Activation Keys.....5
Alarm..... 29
Arming..... 31

B

Base Unit.....5
Base Unit Connector.....5
Batteries
  Battery Bay.....7
  Inserting.....8
  RCU 7, 8
  TU8

C

Command Keys.....5
Command Keys LEDs9, 31, 32, 33
Components
  Activation Keys.....5
  Base Unit Connector ...5
  Battery (RCU) 7
  Battery Bay.....7
  Command Keys 5
  Display.....4
  Foldable Antenna (RCU).....7
  Foldable Antenna (TU).....4
  Foldable Antenna (XU) 6
  Green LED..... 6, 7
  Master Key 4, 5
  Panel (TU) 5
  Power Key 7
  Programming Keys.....5
  PTT Switch.....4
  Red LED..... 6, 7
  Remotely Controlled Unit 7
  Squib Contacts.....7
  Terminal Unit 4
  Test Key.....7
Components Definition.....1

D

Disclaimer ii
Display.....4

E

Entering a value.....9
Event
  Clearing..... 33
  Mode 23, 30
  Performing 12, 27
  Programming 11, 22
  Programming mode .. 23
  Selecting mode..... 30
  Selecting number 22, 30
EVENTS CONTROL..... 22
Extension Unit 6
External PTT..... 6

F

Firing..... 31
  Automatic mode..... 33
  Manual mode 31
  Semi-Automatic mode 32
Foldable Antenna
  RCU 7
  TU4
  XU 6

G

Green LED..... 6, 7

L

LEDs
  Activation Keys 5
  Command Keys5, 9, 31, 32, 33
  Green..... 6, 7
  Red 6, 7

M

Main Settings Menu9, 10, 13
Master Key..... 4, 5, 9

O

Overview..... 11

P

Panel (TU) 5
Power Key 7
PROGRAM AUTO 23
PROGRAM EVENT 23
PROGRAM MANUAL.. 25
PROGRAM S-AUTO..... 24
Programming Keys..... 5
PTT Switch 4

R

RCU.....7
  Adding 26
  Setting.....12, 26
  Sleep 29
  Testing 27
  Wakeup.....29
Red LED.....6, 7

S

Safety.....3
Screen
  ADD UNITS 16
  BACKLIGHT.....20
  CHOOSE EVENT.....16
  CLEAR EVENT.....16
  CLOCK 19
  EVENTS CONTROL 14, 22
  INTENSITY 19
  Main Settings Menu10, 13
  PASSWORDS.....20
  PROGRAM AUTO15, 23
  PROGRAM EVENT 14, 23
  PROGRAM MANUAL.....15, 25
  PROGRAM S-AUTO 15, 24
  RCU X 1 17
  RCU X 16.....17
  SELECT EVENT 14, 22
  SET ALARM TIME .18
  SET UNITS 18
  SLEEP 18
  Standby 10, 13
  Test 1 SEC.....17
  TU SETTINGS.....19
  WAKEUP.....18
SELECT EVENT.....22
Selecting menu item.....9
Squib Contacts 7
Standby screen 9, 10, 13
Start-Up 9
System Characteristics.....2

T

Test Key 7

X

XU
  Setting.....25

Quick Reference Guide

See page

Step 1: Select Event Number **22**

1. In the main settings menu, select **EVENTS CONTROL**.
2. Select **SELECT EVENT**.
3. Select an event number (from 1 to 8), and press Enter.

Step 2: Program Event Modes **23**

1. Select **PROGRAM EVENT**.
2. Select the desired mode (manual, s-auto, auto) you want to program:

PROGRAM MANUAL	PROGRAM S-AUTO	PROGRAM AUTO
3. Select **GROUP** and **RCU** numbers.	3. Select **GROUP** and **RCU** numbers.	3. Select **GROUP** and **RCU** numbers.
4. Select **+**.	4. Select **+**.	4. Select **+**.
	5. Select order of activation **NUMBER**.	5. Set the minutes, seconds and tens of seconds.

Step 3: Add Units **26**

1. In the main settings menu screen on the TU, select **ADD UNITS**.
2. Select **RCU X 1**.
3. Select the **GROUP** number and the **RCU** number.
4. On the RCU device, press and hold the **Test** key and press the **Pwr** key.
5. On the TU, press **Enter**.
6. Write down the address and insert it into RCU battery bay.

Repeat this procedure for each of the RCUs.

Step 4: Test RCUs **27**

1. Place each RCU device in position.
2. Press the **Pwr** key on the RCU.
3. In the main settings menu on the TU Select **ADD UNIT**.
4. Select **Test 1 SEC.**.
5. Leave TU in place and check each individual RCU.

Step 5: Set RCUs Sleep State and Alarm (optional) **28**

Step 6: Select Event Number and Mode **29**

1. On the main settings menu, select **EVENTS CONTROL**.
2. Select **SELECT EVENT**.
3. Select the desired event number and press **Enter**. The **EVENTS CONTROL** menu will be displayed again.
4. Select **CHOOSE EVENT**.
5. Select the desired event mode for the selected event number.
6. Press **Esc** three times to display the standby screen.

Step 7: Arm the System **30**

Press the **Ready** key. **The system is in armed state.**

Step 8: Fire **31**

MANUAL	S-AUTO	AUTO
1. Press the **Group** key to select the desired group.	1. Press the PTT and press the **Send** key.	1. Press the PTT and press the **Send** key.
2. Press the PTT and press any of the active Activation keys (LED green).	2. A firework will fire in the pre-programmed order every time you press the **Send** key.	2. As long as you hold the PTT, the fireworks will fire in the pre-programmed order and timing.