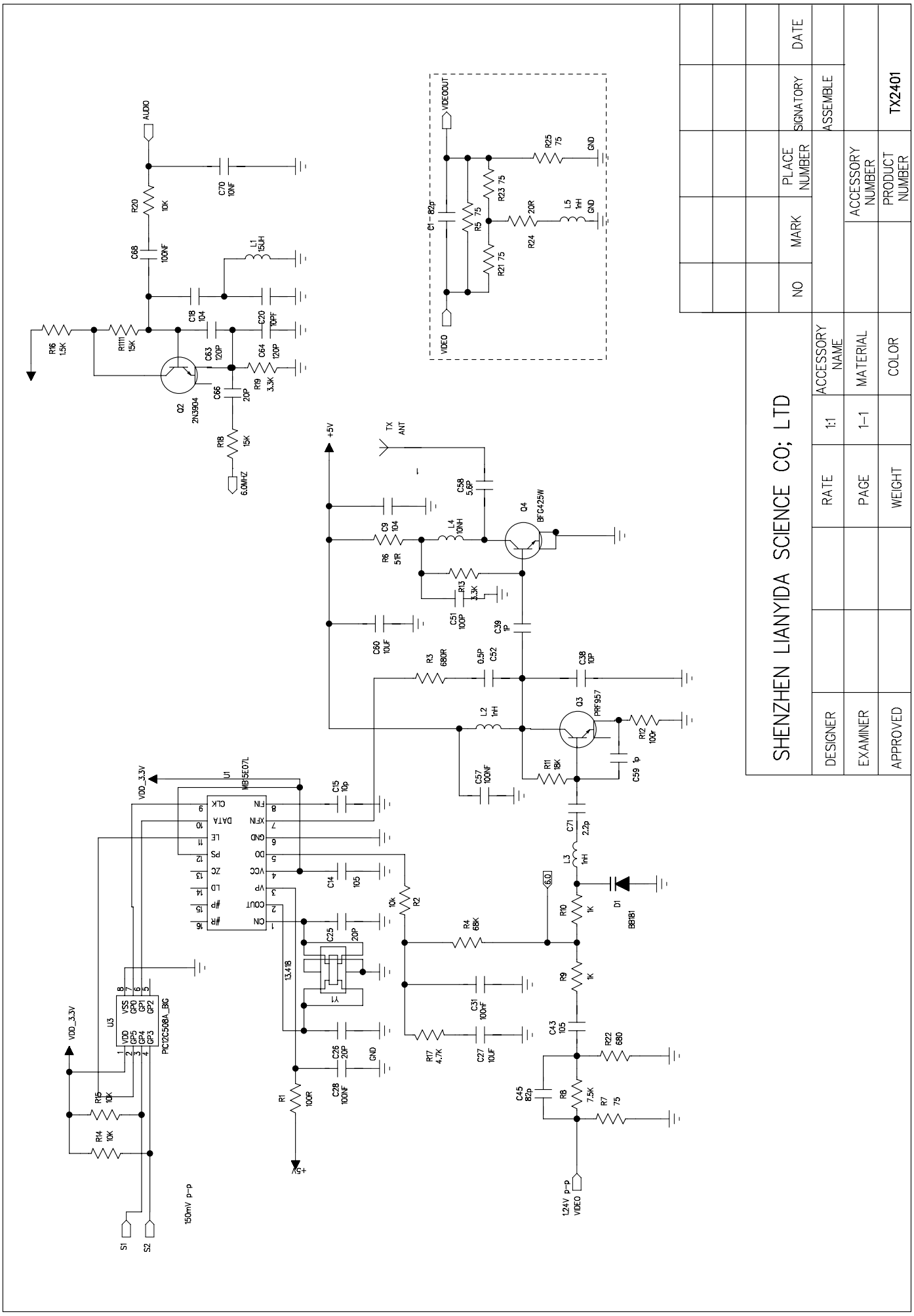
AUDIO
C70 10NF
R20 10K
C68 100NF
L1 15UH
C18 104
C20 10PF
R16 1.5K
R111 15K
C63 120P
C64 120P
R19 3.3K
C66 20P
Q2 2N3904
R18 15K
6.0MHZ
VIDEOOUT
VIDEO
C1 82p
R5 75
R21 75
R23 75
R24 20R
L5 1nH
R25 75
GND
+5V
TX ANT
C58 5.6P
C9 104
L4 10NH
Q4 BFG425W
R6 51R
R13 3.3K
C51 100P
C39 1P
C60 10UF
R3 680R
0.5P C52
C38 10P
L2 1nH
Q3 PRF957
R12 100r
C59 1p
R11 18K
C57 100NF
C71 2.2p
L3 1nH
D1 BB181
R10 1K
R9 1K
C43 105
R22 680
C45 82p
R8 7.5K
R7 75
1.24V p-p VIDEO
VDD_3.3V
U1 MB15E07L
CLK DATA LE PS DO VCC VP COUT CIN
FIN XFIN GND #R #P LD ZC
C15 10p
C14 105
R2 10k
R4 68K
C25 20P
Y1 13.41B
C31 100nF
R17 4.7K
C27 10UF
C26 20P
C28 100NF
R1 100R
U3 PIC12C508A_BG
VSS VDD GP0 GP1 GP2 GP3 GP4 GP5
R15 10K
R14 10K
S1
S2
150mV p-p
SHENZHEN LIANYIDA SCIENCE CO; LTD
DESIGNER
EXAMINER
APPROVED
RATE 1:1
PAGE 1-1
WEIGHT
ACCESSORY NAME
MATERIAL
COLOR
NO
MARK
PLACE NUMBER
SIGNATORY
DATE
ASSEMBLE
ACCESSORY NUMBER
PRODUCT NUMBER
TX2401
LYD-TX2401-A/1

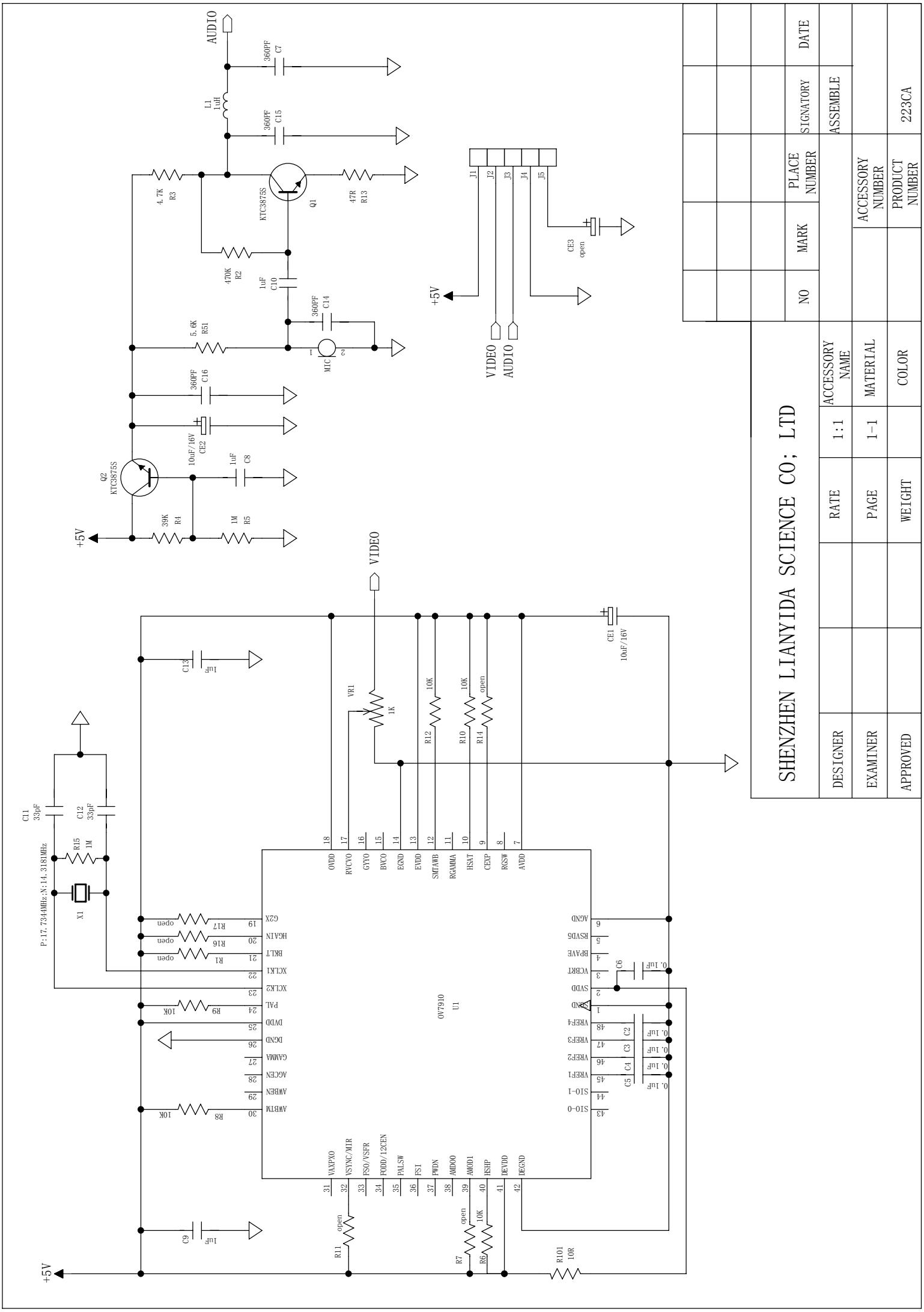
AUDIO
360PF C7
L1 1uH
360PF C15
4.7K R3
KTC3875S Q1
47R R13
470K R2
1uF C10
360PF C14
5.6K R51
MIC
360PF C16
10uF/16V CE2
Q2 KTC3875S
1uF C8
39K R4
1M R5
+5V
J1 J2 J3 J4 J5
CE3 open
VIDEO
AUDIO
VIDEO
CE1 10uF/16V
C13 1uF
VR1 1K
10K R12
10K R10
open R14
C11 33pF
C12 33pF
R15 1M
P:17.7344MHz;N:14.3181MHz
X1
OV7910 U1
OVDD RVCVO GYYO BVCO EGND EVDD SMTAWB RGAMMA HSAT CEXP RGSW AVDD
G2X HGAIN BRLT XCLK1 XCLK2 PAL DVDD DGND GAMMA AGCEN AWBEN AWBTM
AGND RSVD5 BPAVE VCBRT SVDD GND VREF4 VREF3 VREF2 VREF1 SIO-1 SIO-0
VAXPXO VSYNC/MIR FSO/VSFR FODD/12CEN PALSW FSI PWDN AMDOO AMOD1 HSHP DEVDD DEGND
open R17
open R16
open R1
R9 10K
R8 10K
C9 1uF
open R11
open R7
10K R6
R101 10R
C6 0.1uF
C2 0.1uF
C3 0.1uF
C4 0.1uF
C5 0.1uF
+5V
DATE
SIGNATORY
ASSEMBLE
PLACE NUMBER
MARK
NO
ACCESSORY NUMBER
PRODUCT NUMBER
223CA
SHENZHEN LIANYIDA SCIENCE CO; LTD
ACCESSORY NAME
MATERIAL
COLOR
1:1
1-1
RATE
PAGE
WEIGHT
DESIGNER
EXAMINER
APPROVED