Appendix 7. Schematics

Refer to the following pages

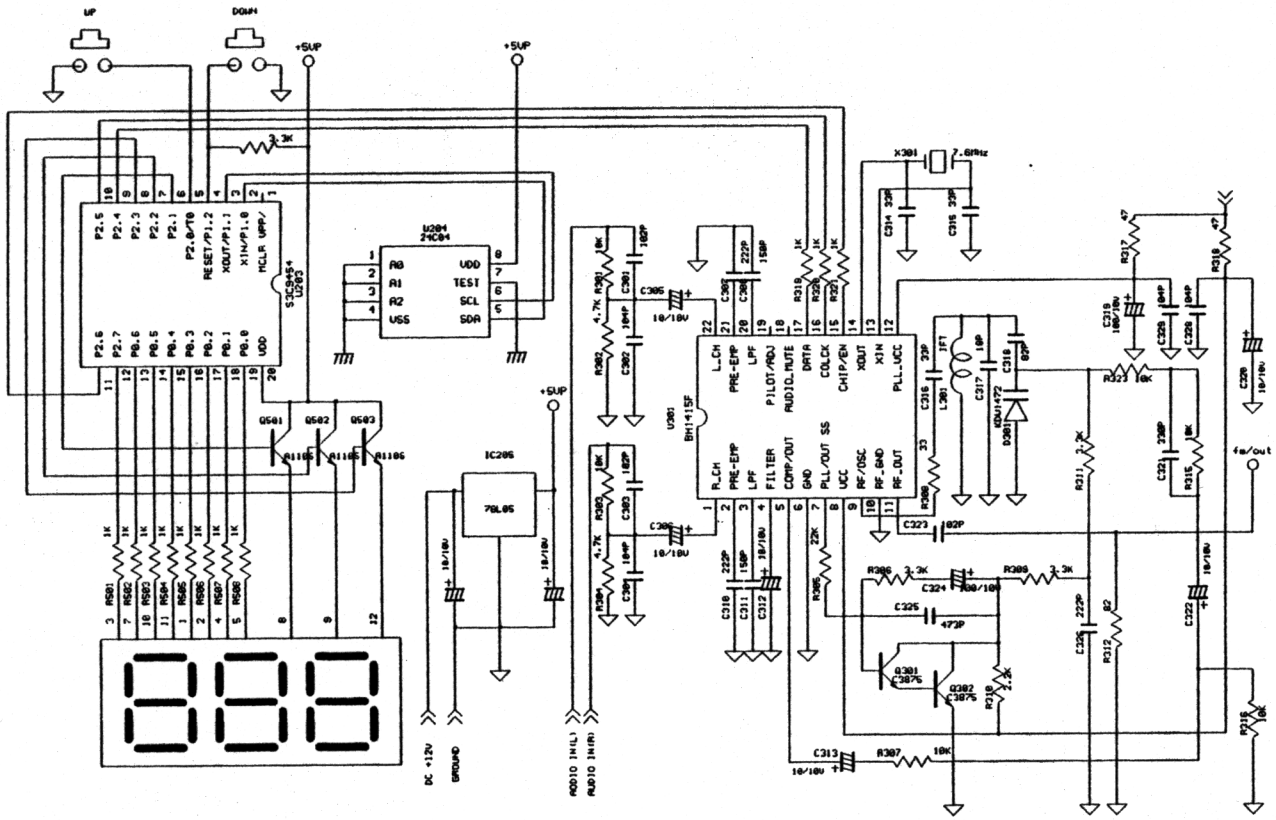

TITLE	FM TRANSMITTER		
COMP.	D.B.LOGIC	MODEL	NFM-40T
REV.	00	DATE	2003.6.01
TEAM	1	SHEET	1 OF 1