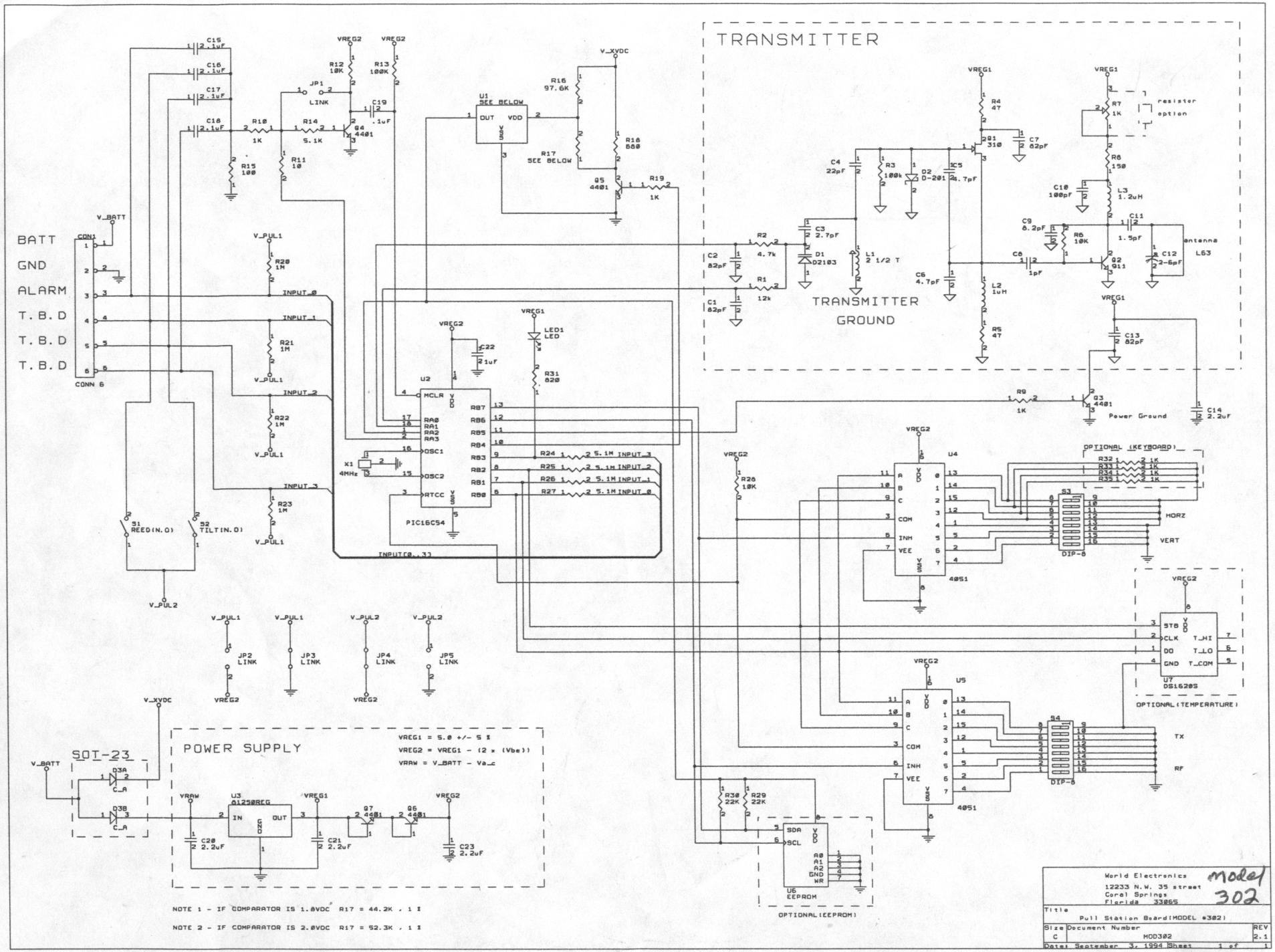
TRANSMITTER
TRANSMITTER GROUND
POWER SUPPLY
VREG1 = 5.0 +/- 5 %
VREG2 = VREG1 - (2 x (Vbe))
VRAW = V_BATT - Vs_c
NOTE 1 - IF COMPARATOR IS 1.0VDC R17 = 44.2K , 1 %
NOTE 2 - IF COMPARATOR IS 2.0VDC R17 = 52.3K , 1 %
BATT
GND
ALARM
T.B.D
T.B.D
T.B.D
CONN 6
PIC16C54
4051
DIP-8
DS1620S
OPTIONAL (KEYBOARD)
OPTIONAL (TEMPERATURE)
OPTIONAL(EEPROM)
EEPROM
SOT-23
LINK
REED(N.O)
TILT(N.O)
antenna
L63
Power Ground
resistor option
HORZ
VERT
TX
RF
World Electronics
12233 N.W. 35 street
Coral Springs
Florida 33065
model 302
Pull Station Board(MODEL #302)
MOD302
REV 2.1
Date: September 3, 1994 Sheet 1 of 1