#60902F1.SCH-1 - Sun Jan 13 13:51:33 2002

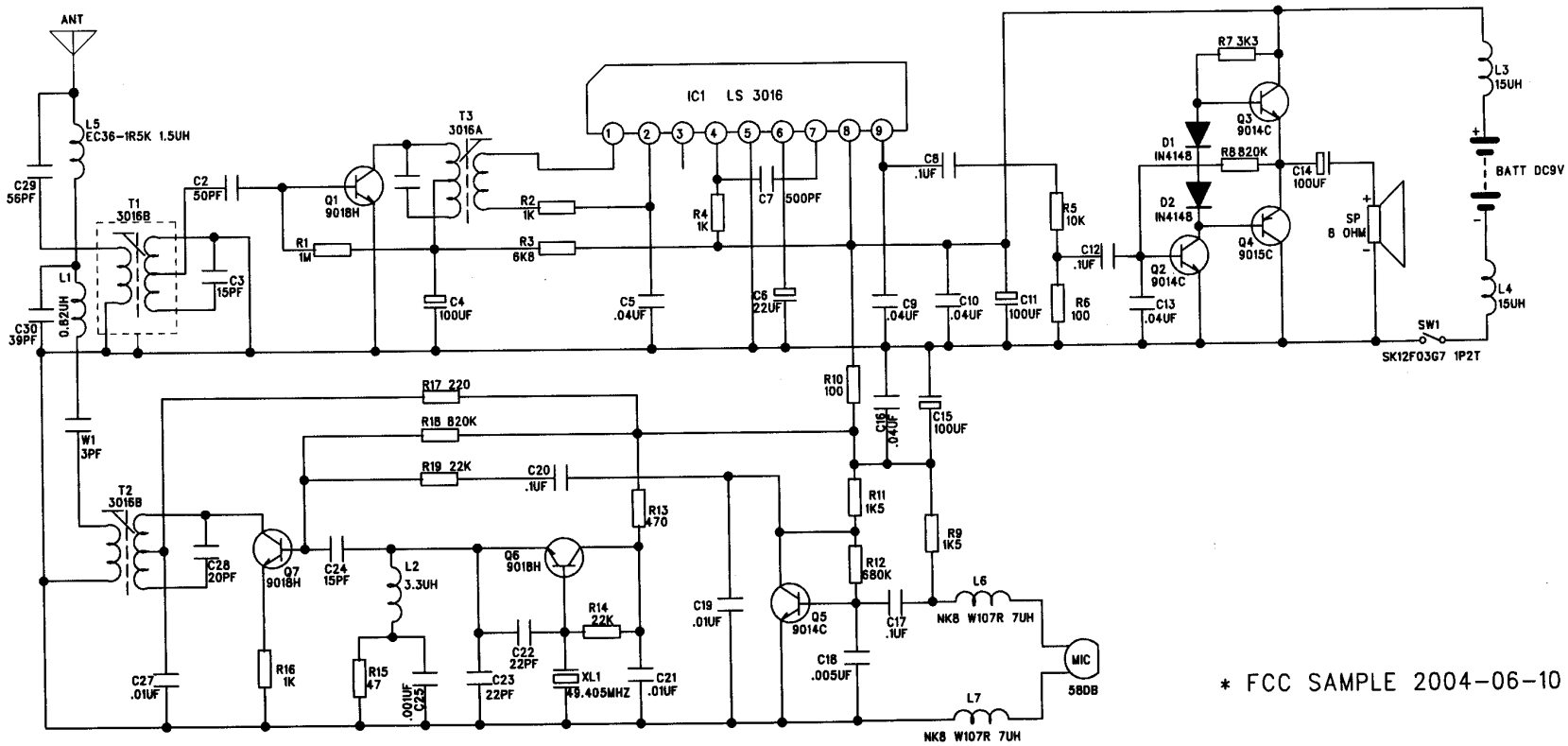

* FCC SAMPLE 2004-06-10

* TO BE ADJUSTED

COMPANY:		
MODEL NO: #60902(49.405MHZ)		
TITLE: 1		
DRAWN BY:	DATED: 10/06/2004	SIZE: A3
CHECKED BY:	DATED:	REV: 6.2
APPROVED BY:	DATED:	SHEET: 1 OF 1