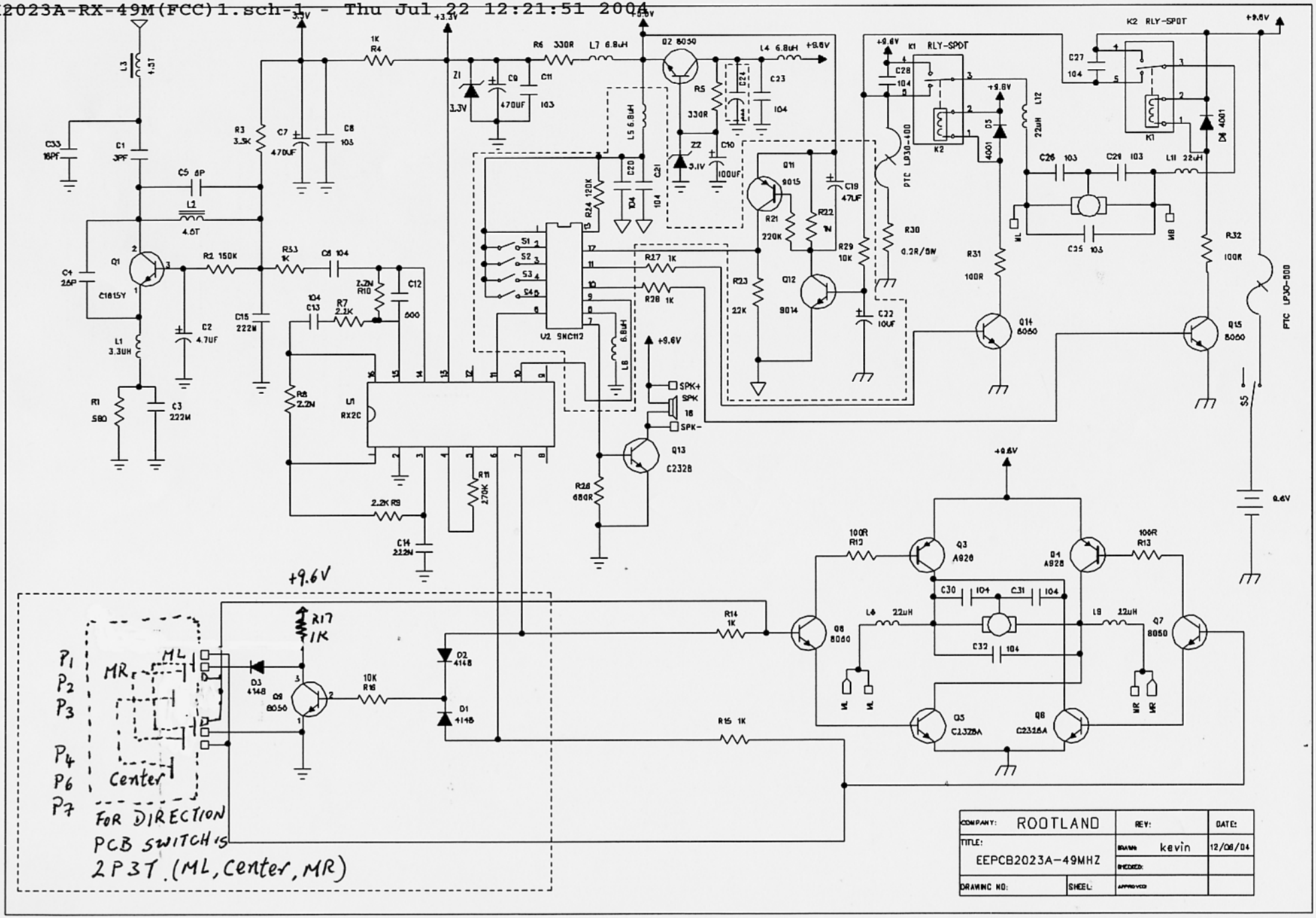
+9.6V
+3.3V
L3 4.3T
C33 18PF
C1 3PF
C5 6P
L2 4.6T
C4 25P
Q1 C1815Y
R2 150K
L1 3.3UH
R1 580
C3 222M
C2 4.7UF
R3 3.3K
C7 470UF
C8 103
C15 222M
R4 1K
R3 1K
C6 104
C13 104
R7 2.2K
R10 2.2M
C12 600
R8 2.2M
U1 RX2C
R9 2.2K
C14 222M
R11 270K
Z1 3.3V
C9 470UF
C11 103
R6 330R
L7 6.8uH
Q2 8050
R5 330R
Z2 3.1V
C10 100UF
C24
C23 104
L4 6.8uH
L5 6.8uH
C20 104
C21 104
R24 120K
U2 SNC112
S1
S2
S3
S4
R27 1K
R28 1K
L6 6.8uH
R26 680R
Q13 C2328
SPK+
SPK
16
SPK-
Q11 9015
R21 220K
R22 1M
C19 47UF
R23 22K
Q12 9014
R29 10K
C22 10UF
R30 0.2R/5W
PTC LP30-400
K1 RLY-SPOT
K2
C28 104
D5 4001
L12 22uH
C27 104
K2 RLY-SPOT
D4 4001
C26 103
C29 103
L11 22uH
C25 103
ML
MR
R31 100R
R32 100R
Q14 8050
Q15 8050
PTC LP30-800
S5
9.6V
Q3 A928
Q4 A928
100R R12
100R R13
C30 104
C31 104
L6 22uH
L8 22uH
C32 104
R14 1K
Q6 8050
Q7 8050
Q5 C2328A
Q8 C2328A
R15 1K
R17 1K
D3 4148
Q9 8050
10K R16
D2 4148
D1 4148
P1
P2
P3
P4
P6
P7
MR
ML
Center
FOR DIRECTION
PCB SWITCH IS
2P3T. (ML, Center, MR)
COMPANY: ROOTLAND
REV:
DATE:
TITLE:
EEPCB2023A-49MHZ
DRAWN kevin
12/08/04
CHECKED:
DRAWING NO:
SHEET:
APPROVED: