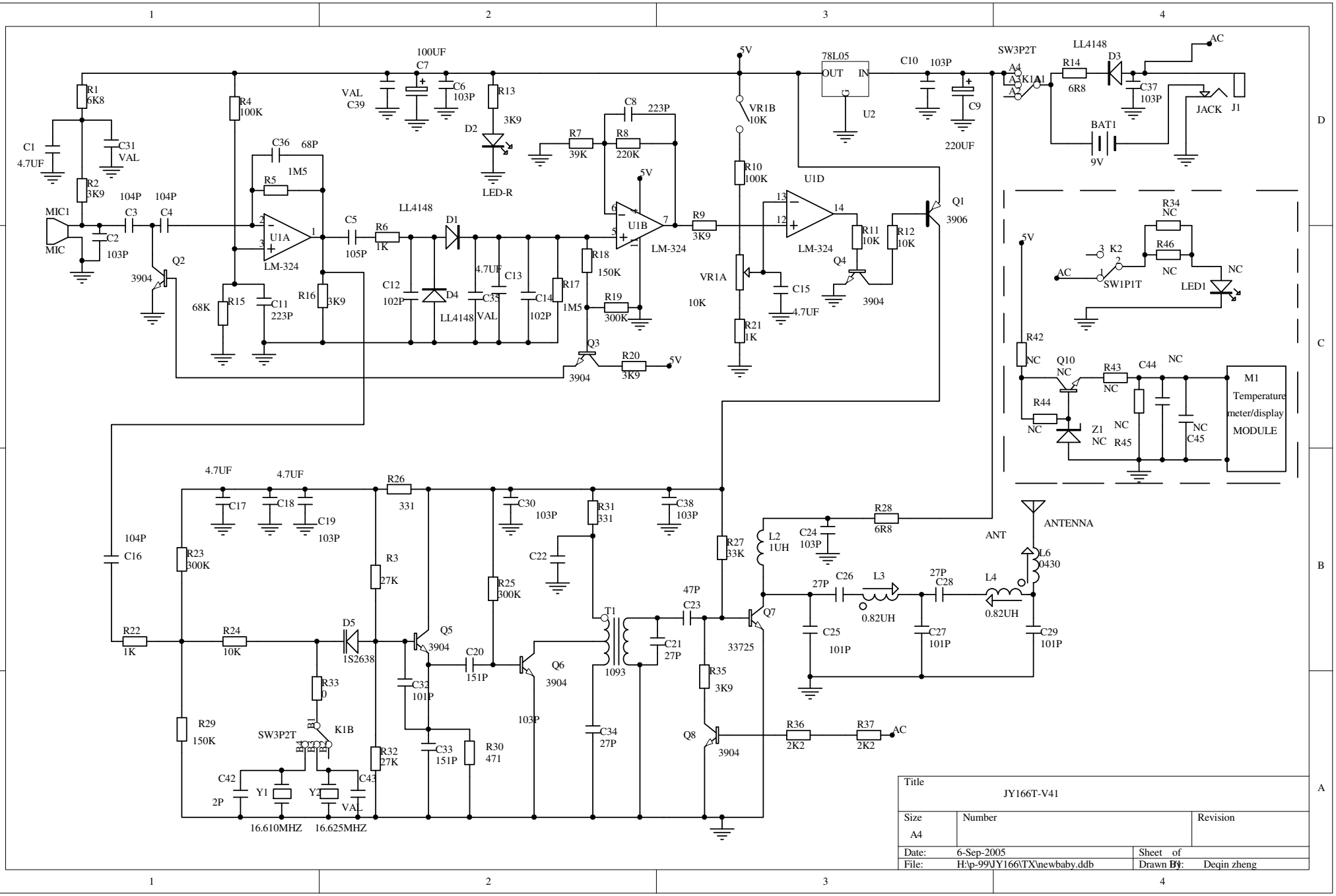

Title	JY166T-V41	
Size A4	Number	Revision
Date: 6-Sep-2005	Sheet of	
File: H:\p-99\JY166\TX\newbaby.ddb	Drawn By: Deqin zheng	