# BLANK

| | | |
|---|---|---|
| 惠勤科技股份有限公司 | | |
| Title<br>**ZyLink 974 Point to Pint Ethernet Wireless Link** | | |
| Size<br>A | Document Number<br>Change Log | Rev<br>1.0A |
| Date: Monday, January 05, 2004 | Sheet 0 of 2 | |

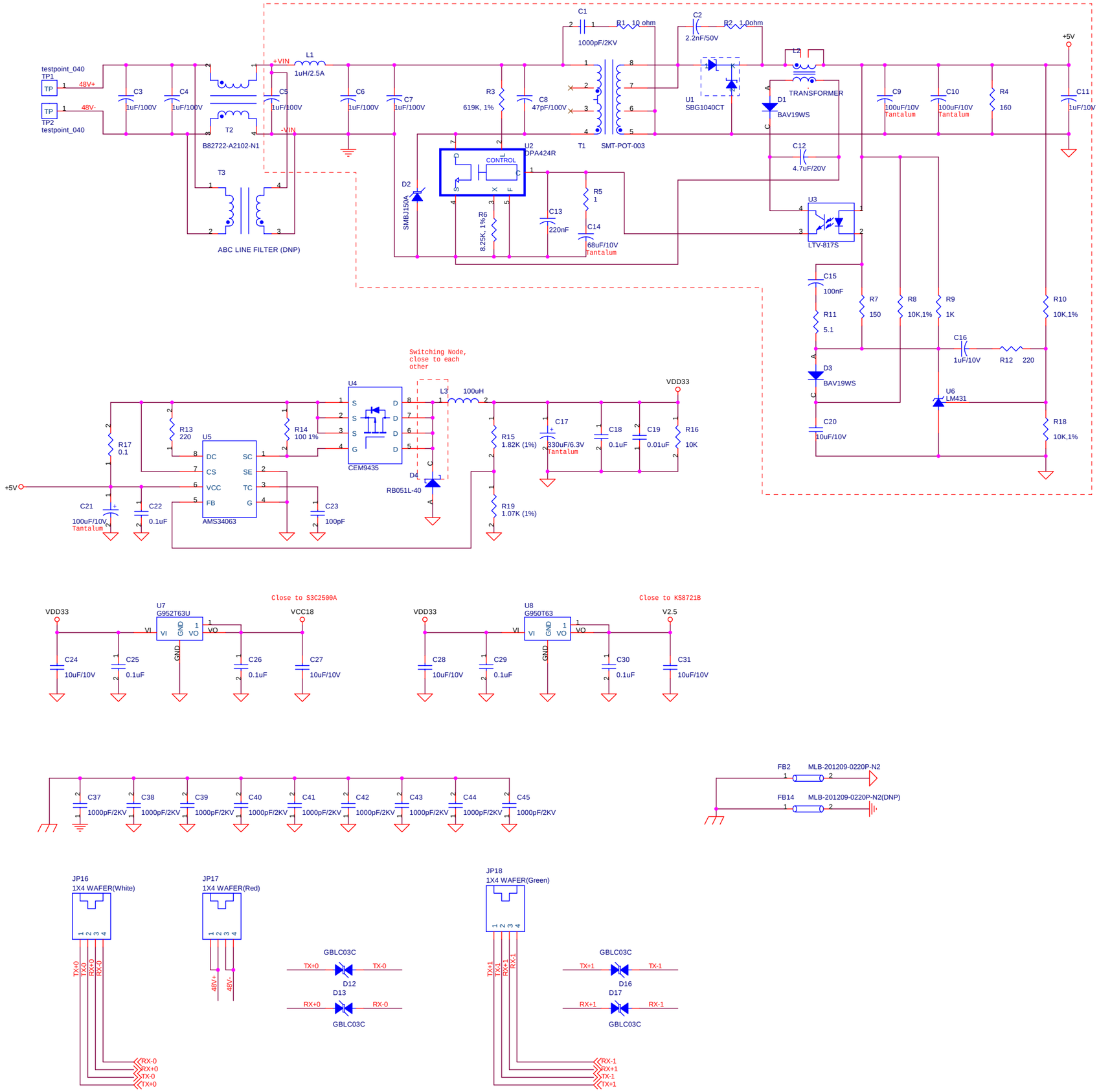


| | | |
|---|---|---|
| 惠勤科技股份有限公司 | | |
| Title | P974 Point to Point WLAN AP/AC | |
| Size C | Document Number<br>Power (POE, +5V, VDD33, VCC18, VDD25, V2.5) | Rev 1.0C |
| Date: Tuesday, January 06, 2004 | Sheet 2 of 11 | |

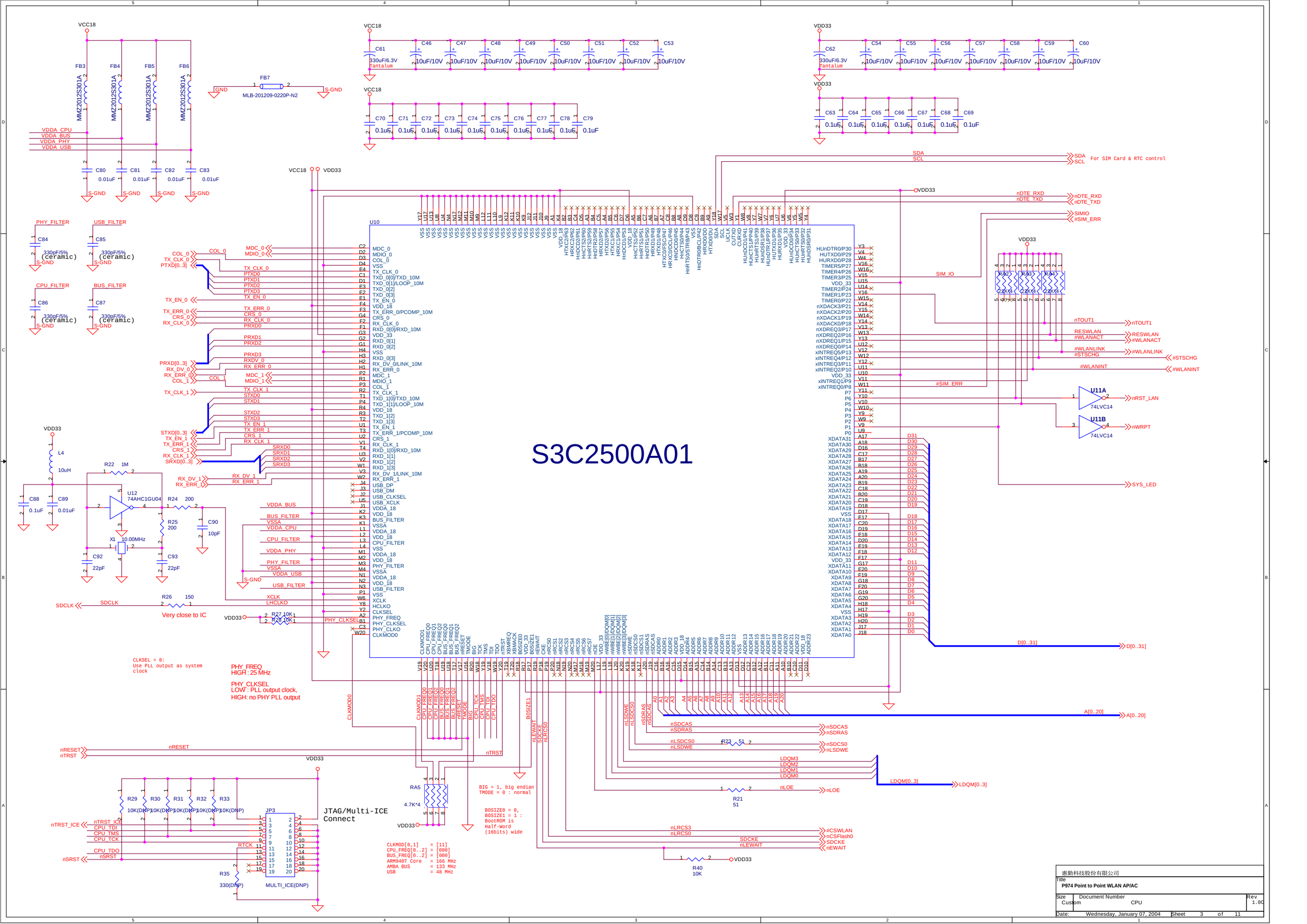


惠勤科技股份有限公司

Title: P974 Point to Point WLAN AP/AC

| Size | Document Number | Rev |
|---|---|---|
| Custom | CPU | 1.0C |

Date: Wednesday, January 07, 2004 Sheet 3 of 11

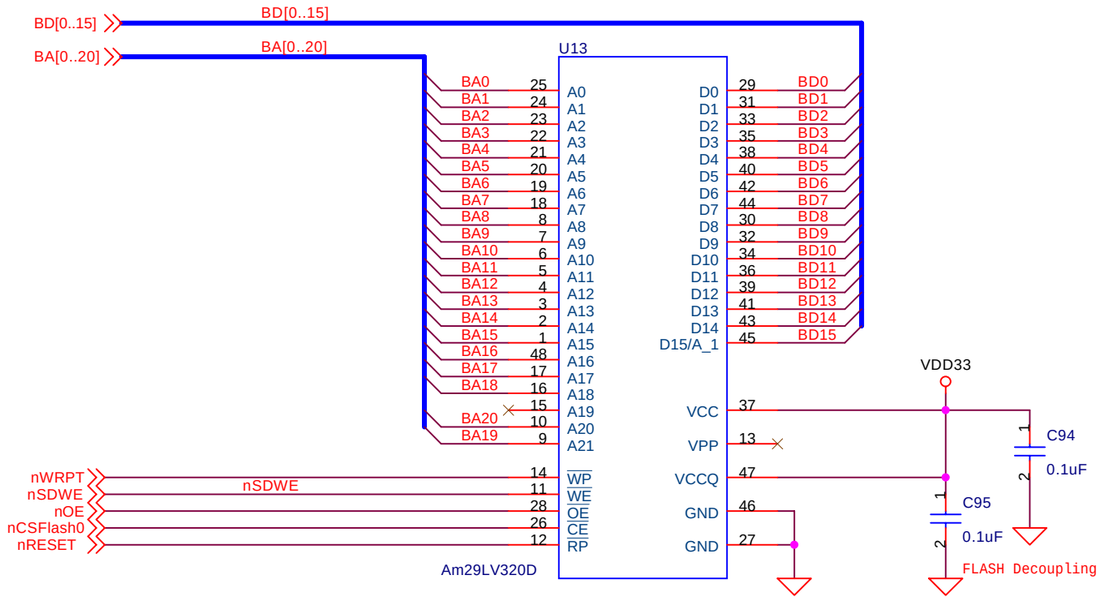


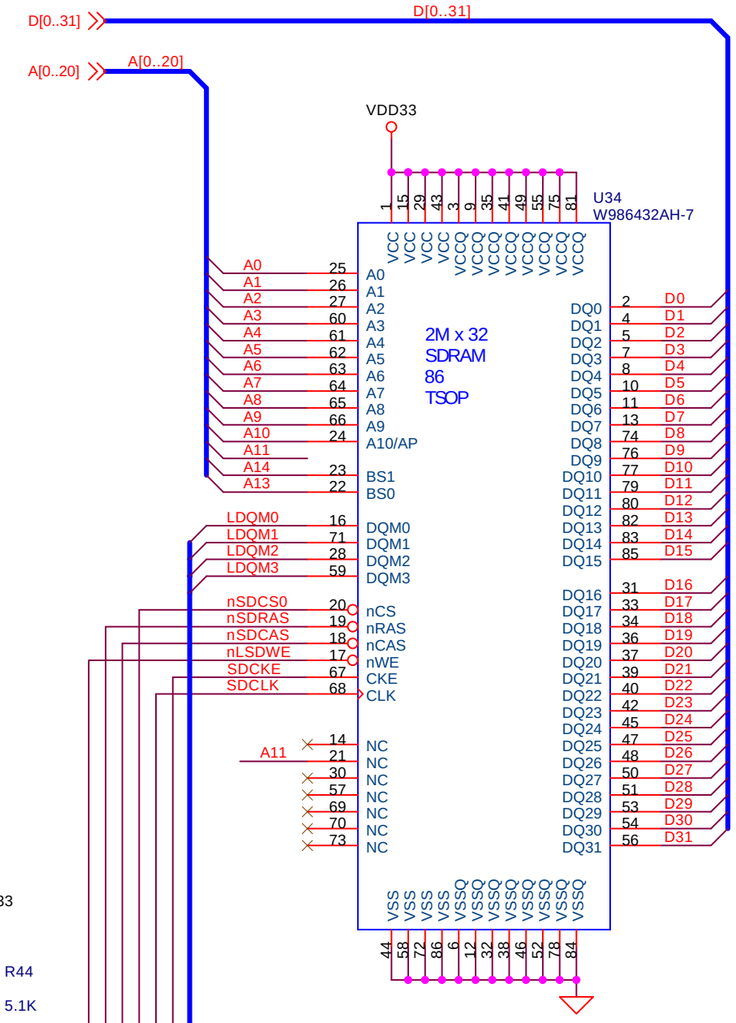


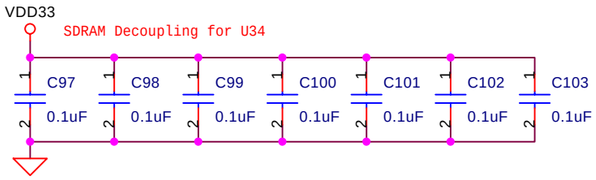


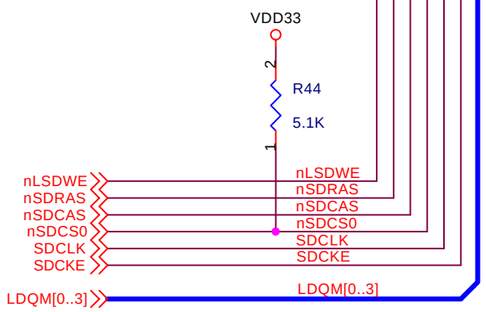


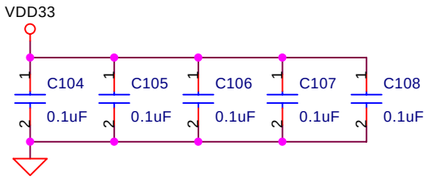


惠勤科技股份有限公司

Title
**P974 Point to Point WLAN AP/AC**

| Size | Document Number | Rev |
|---|---|---|
| B | Flash & SDRAM | 1.0C |

Date: Wednesday, January 14, 2004 Sheet 4 of 11

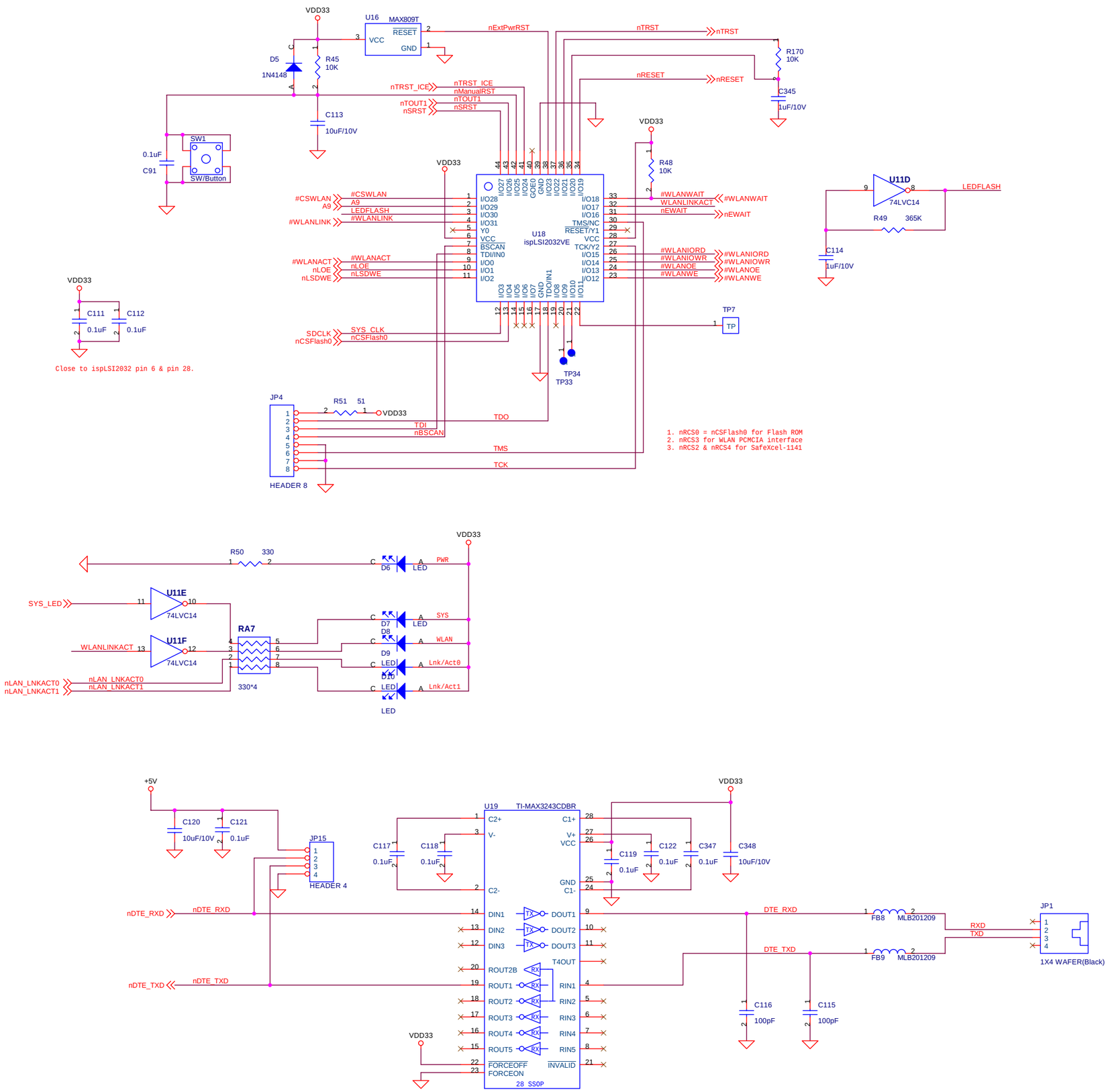


| | | |
|---|---|---|
| 惠勤科技股份有限公司 | | |
| Title: P974 Point to Point WLAN AP/AC | | |
| Size: C | Document Number: CPLD, LED and RS-232 Interface | Rev: 1.0C |
| Date: Wednesday, January 07, 2004 | Sheet 5 of 11 | |

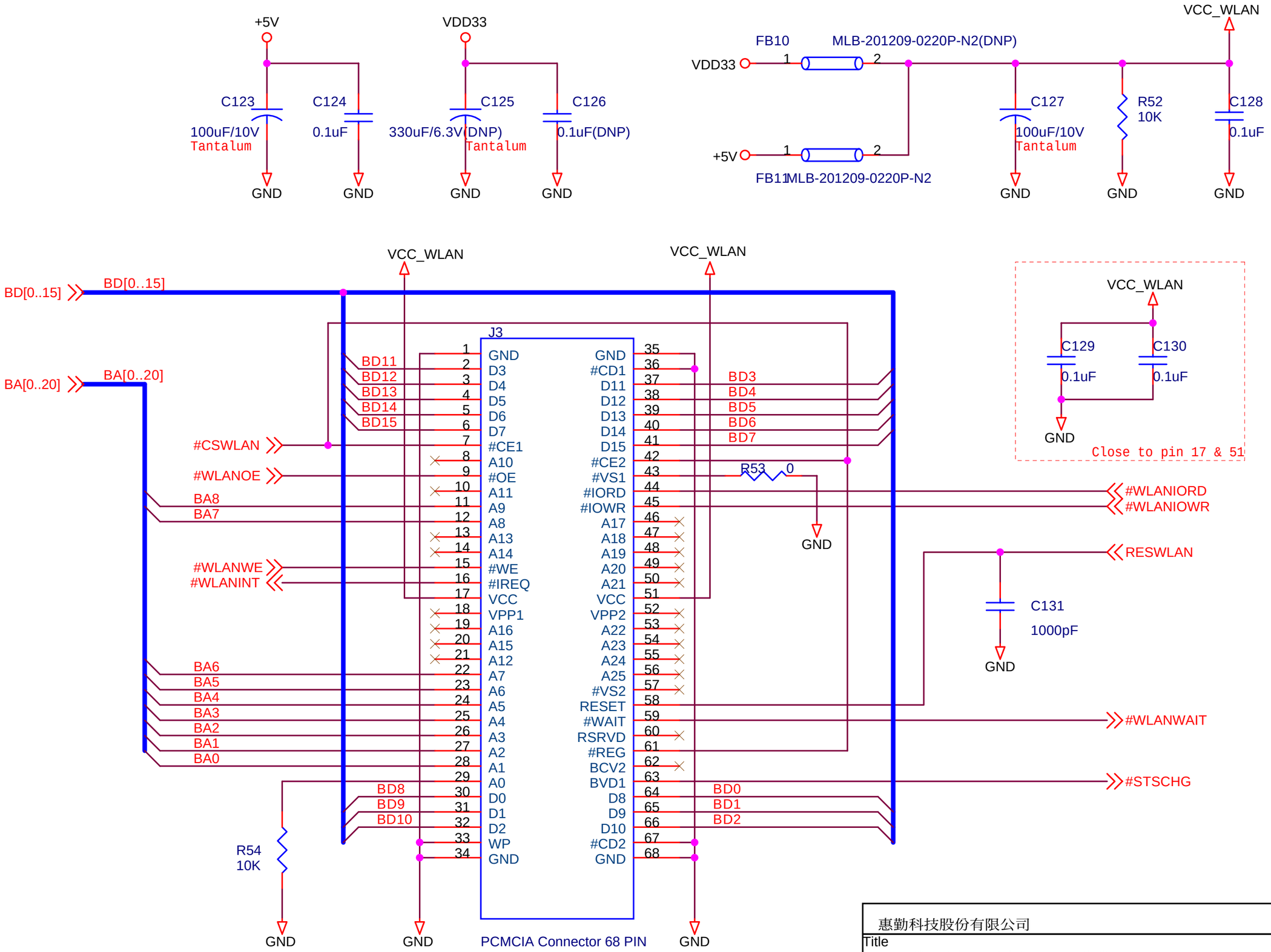


惠勤科技股份有限公司

Title
**P974 Point to Point WLAN AP/AC**

| Size | Document Number | Rev |
|---|---|---|
| A | Bus Buffer & Wireless LAN PCMCIA Interface | 1.0C |

Date: Monday, January 05, 2004 Sheet 6 of 11

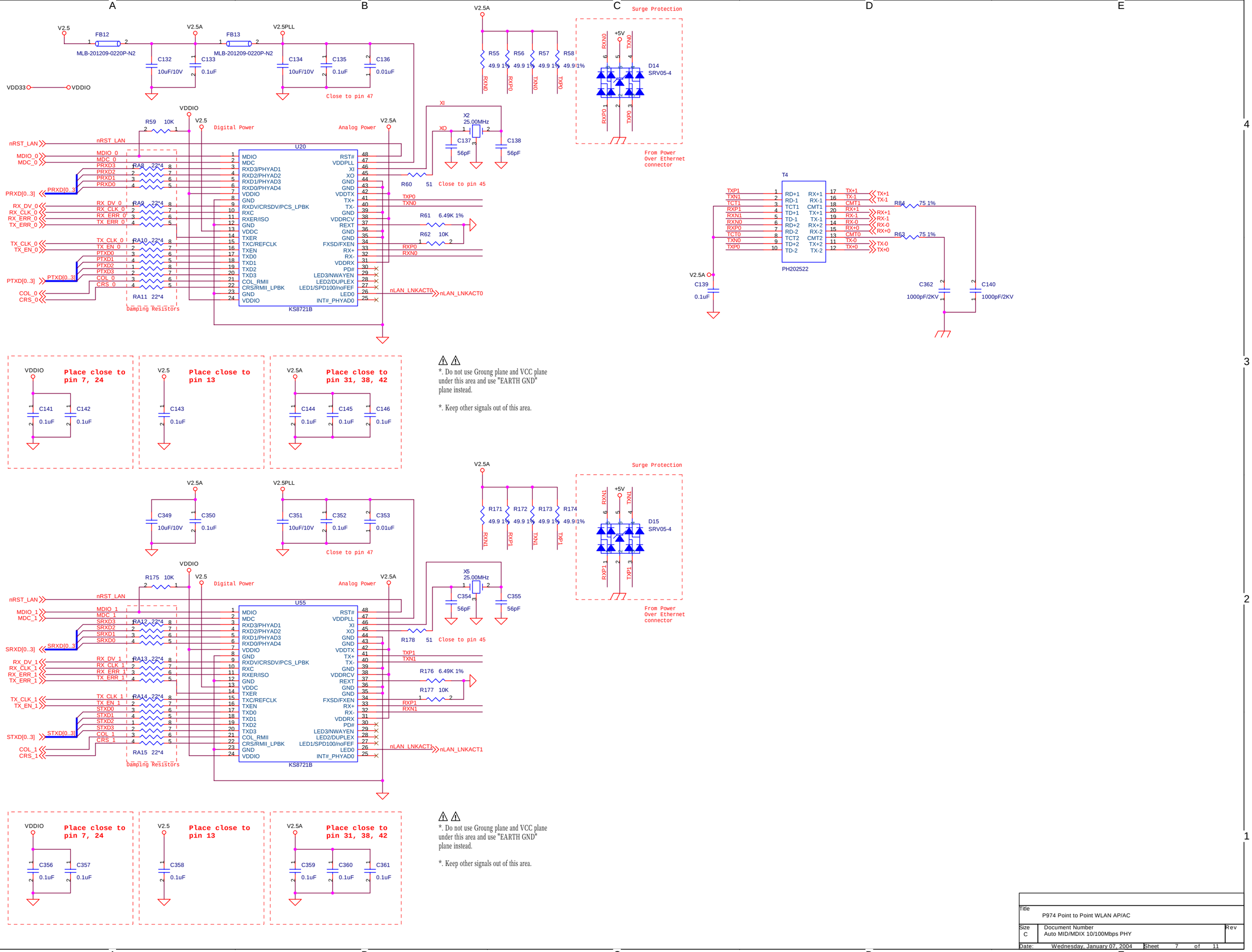


| | |
|---|---|
| Title | P974 Point to Point WLAN AP/AC |
| Size C | Document Number: Auto MID/MDIX 10/100Mbps PHY |
| Rev | |
| Date: Wednesday, January 07, 2004 | Sheet 7 of 11 |

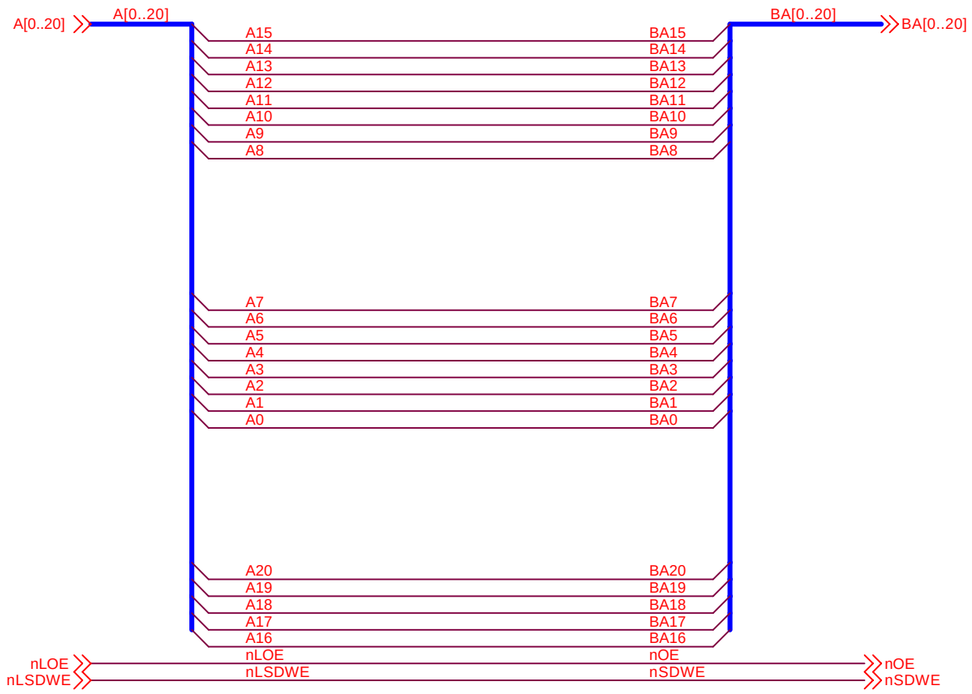

惠勤科技股份有限公司

Title
**P974 Point to Point WLAN AP/AC**

| Size | Document Number | Rev |
|---|---|---|
| B | Bus Buffer & Wireless LAN PCMCIA Interface | 1.0C |

Date: Monday, January 05, 2004 Sheet 8 of 11

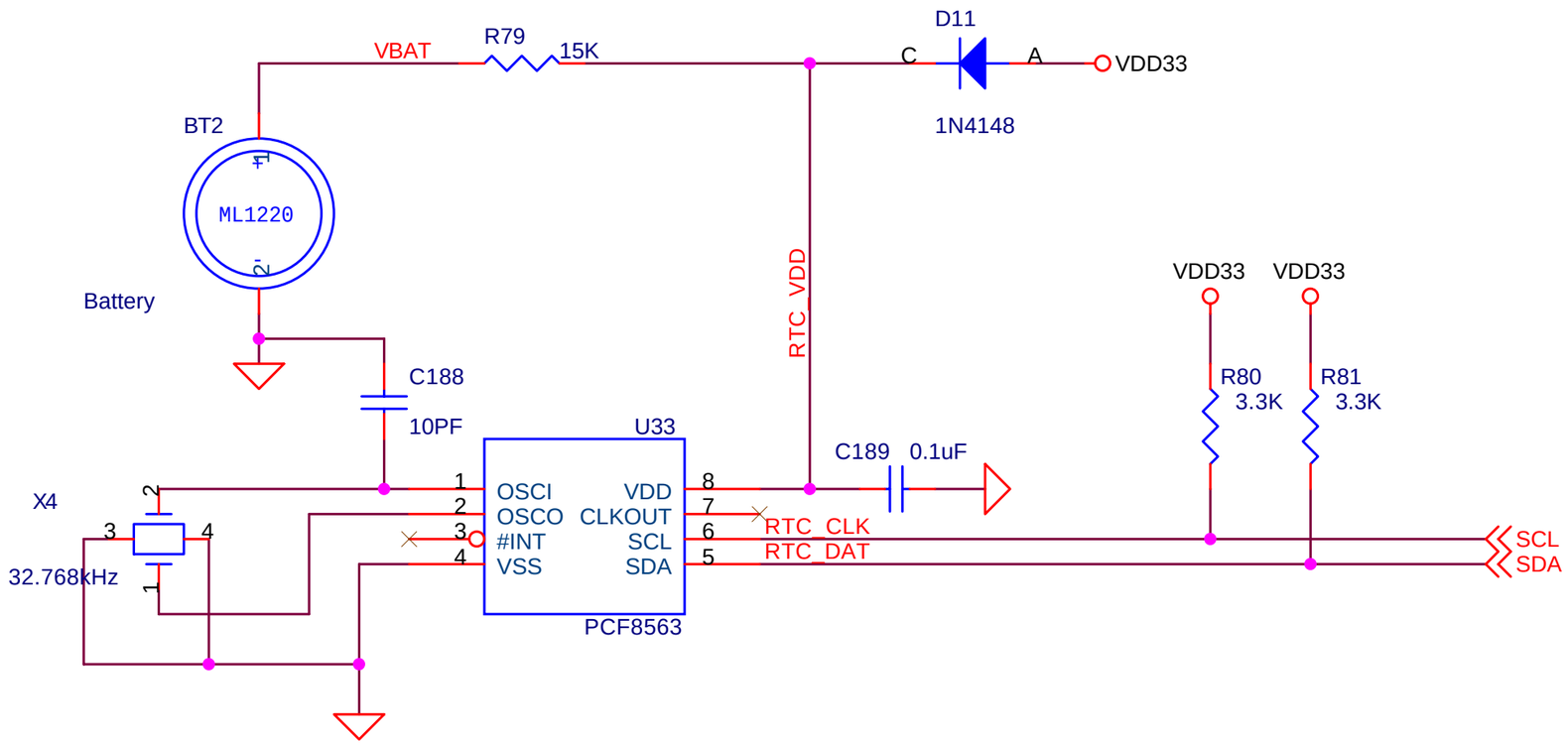


# RTC

| | | |
|---|---|---|
| 惠勤科技股份有限公司 | | |
| Title: **P974 Point to Point WLAN AP/AC** | | |
| Size: A | Document Number: Real Time Clock | Rev: 1.0C |
| Date: Monday, January 05, 2004 | Sheet 9 of 11 | |

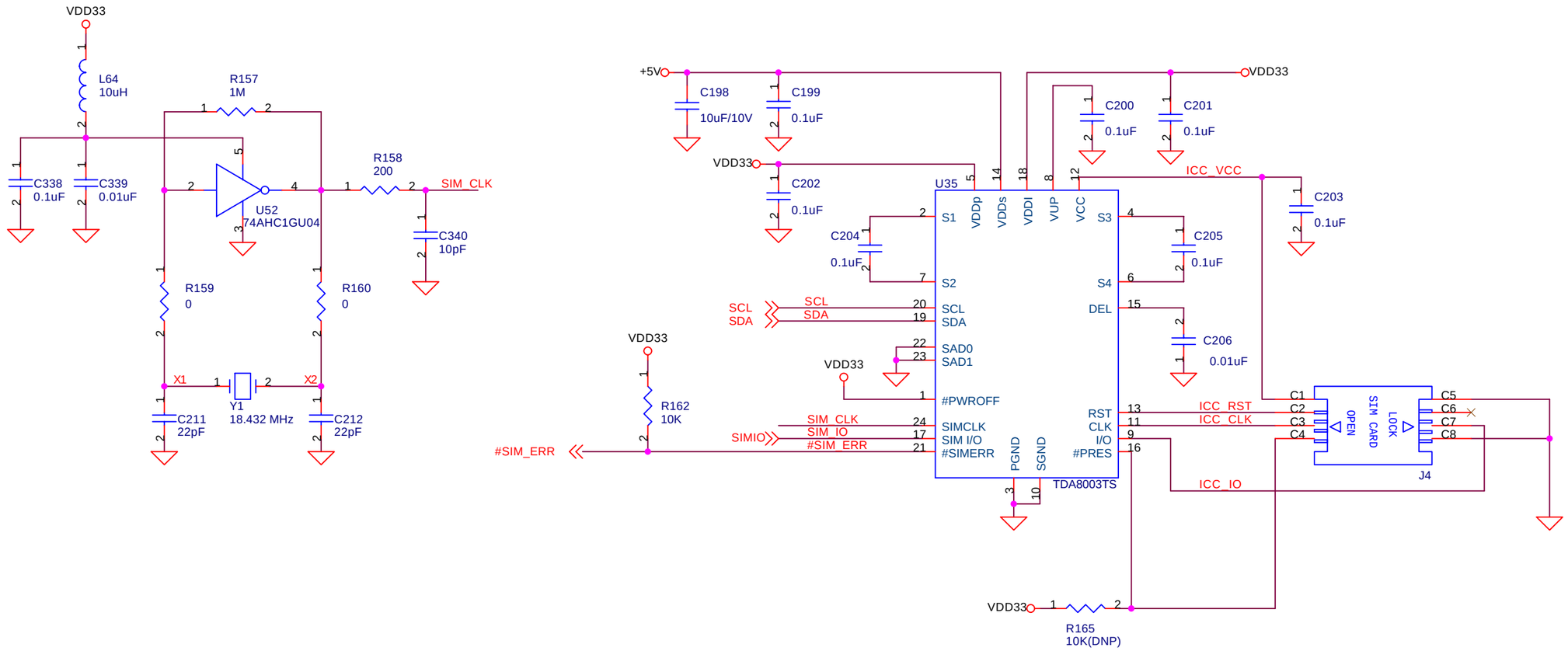


惠勤科技股份有限公司

| | | |
|---|---|---|
| Title | <Title> | |
| Size B | Document Number <Doc> | Rev <RevCode> |
| Date: Friday, January 16, 2004 | Sheet 10 of 11 | |

惠州科技股份有限公司

| | |
|---|---|
| Title | P974 Point to Point WLAN APIAC |
| Size C | Document Number Vias & Tooling holes |
| Rev 1.0C | |
| Date: Monday, January 05, 2004 | Sheet 11 of 11 |

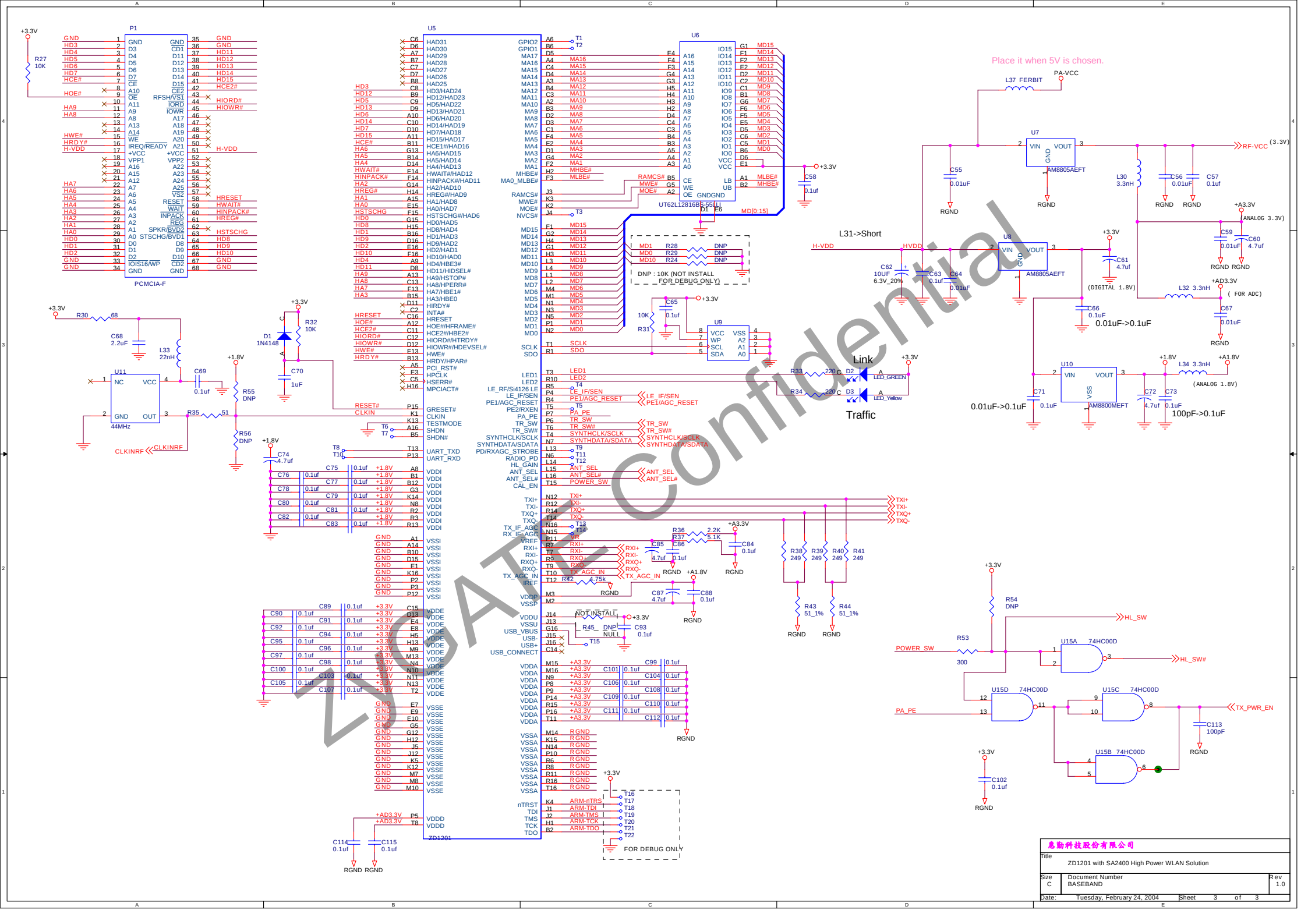
P1
PCMCIA-F
U5
ZD1201
U6
UT62L12816BS-55LL
U7
AM8805AEFT
U8
AM8805AEFT
U9
U10
AM8800MEFT
U11
44MHz
Place it when 5V is chosen.
L31->Short
Link
Traffic
DNP : 10K (NOT INSTALL FOR DEBUG ONLY)
NOT INSTALL
FOR DEBUG ONLY
MD[0:15]
RF-VCC
PA-VCC
HL_SW
HL_SW#
TX_PWR_EN
POWER_SW
PA_PE
CLKINRF
TXI+
TXI-
TXQ+
TXQ-
RXI+
RXI-
RXQ+
RXQ-
TX_AGC_IN
RGND
ZYGATE Confidential
息勤科技股份有限公司
Title
ZD1201 with SA2400 High Power WLAN Solution
Size C
Document Number BASEBAND
Rev 1.0
Date: Tuesday, February 24, 2004
Sheet 3 of 3

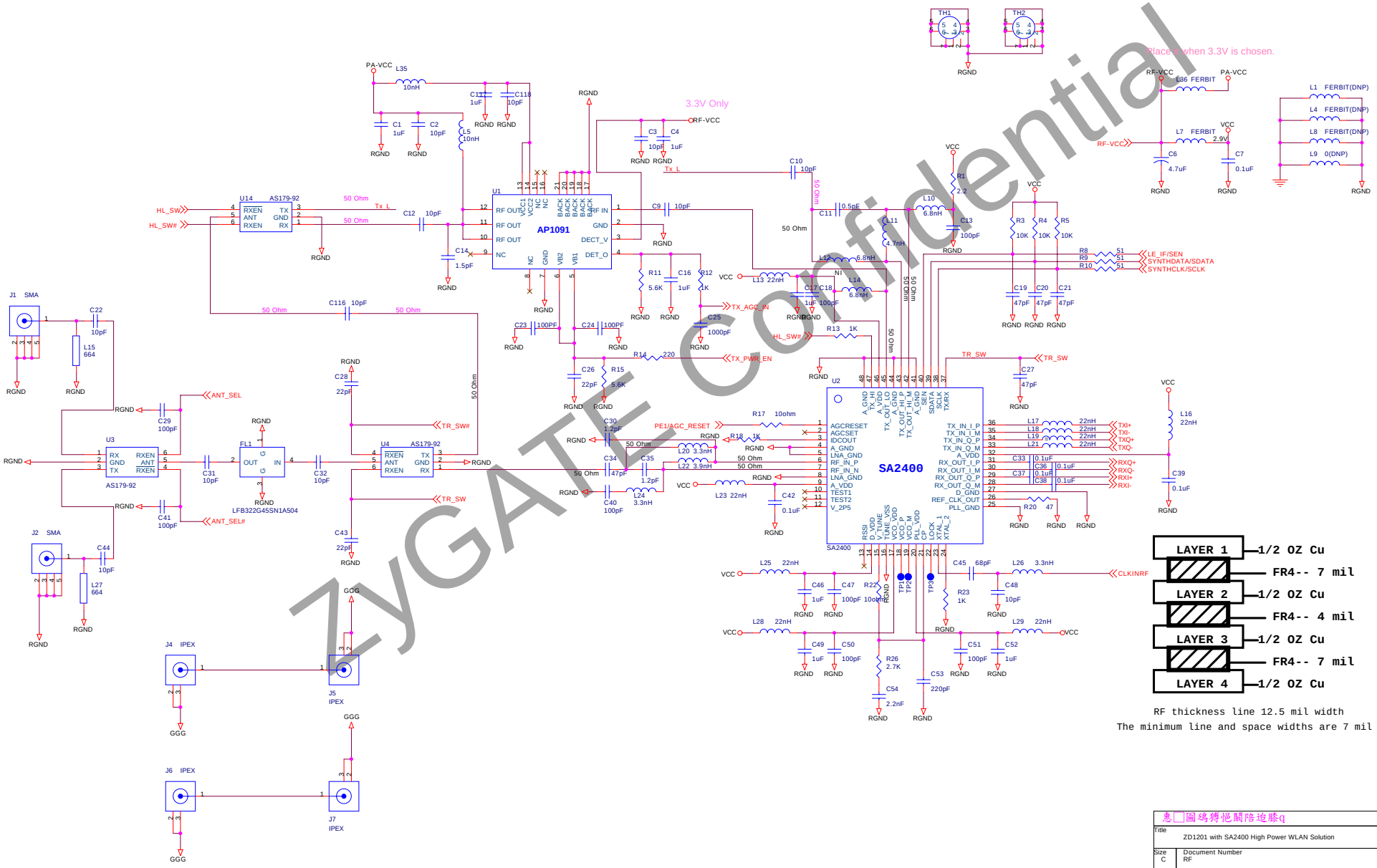


ZyGATE Confidential

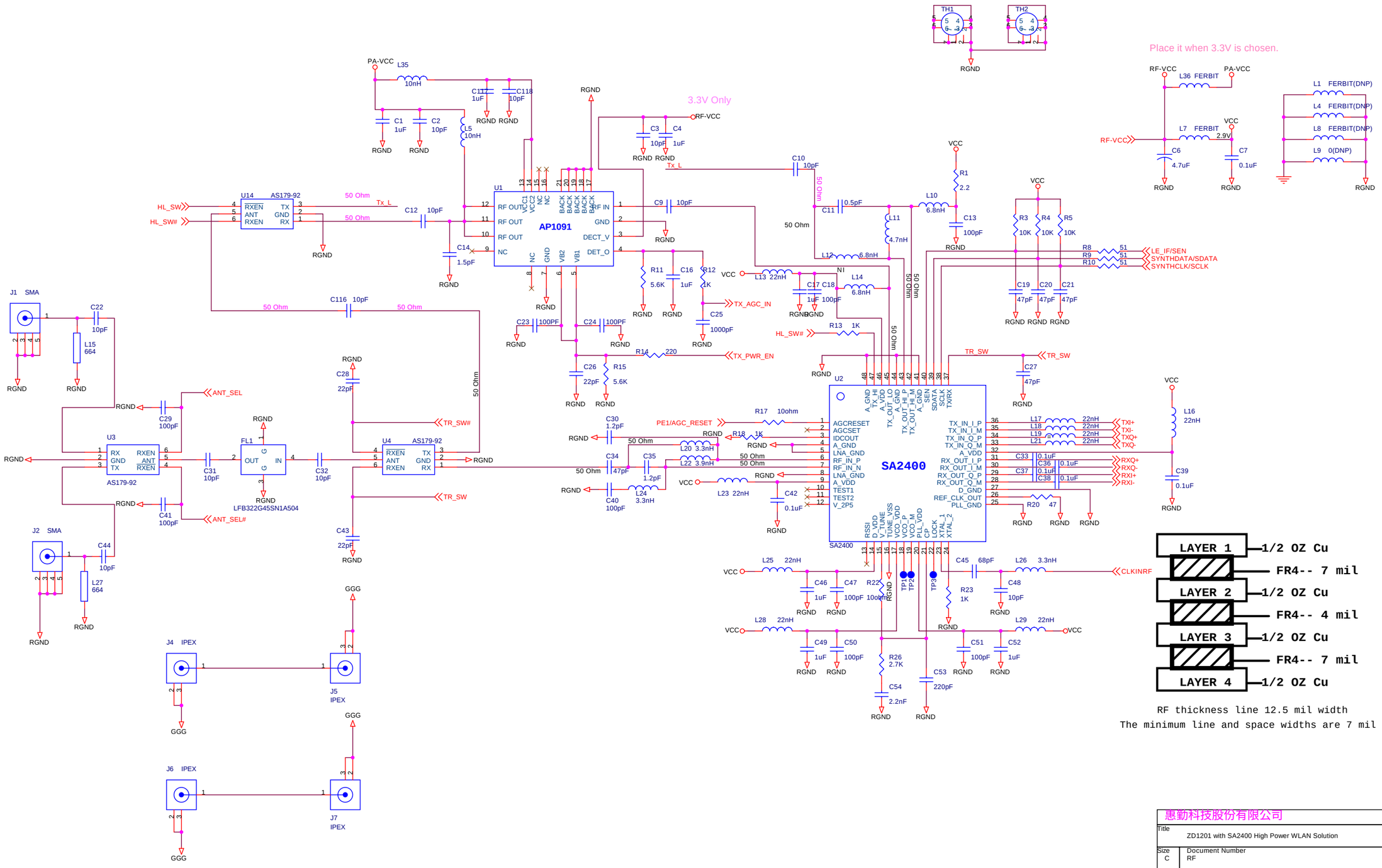


惠勤科技股份有限公司

| | | |
|---|---|---|
| Title | ZD1201 with SA2400 High Power WLAN Solution | |
| Size C | Document Number RF | Rev 1.0 |
| Date: Thursday, February 26, 2004 | Sheet 1 of 3 | |

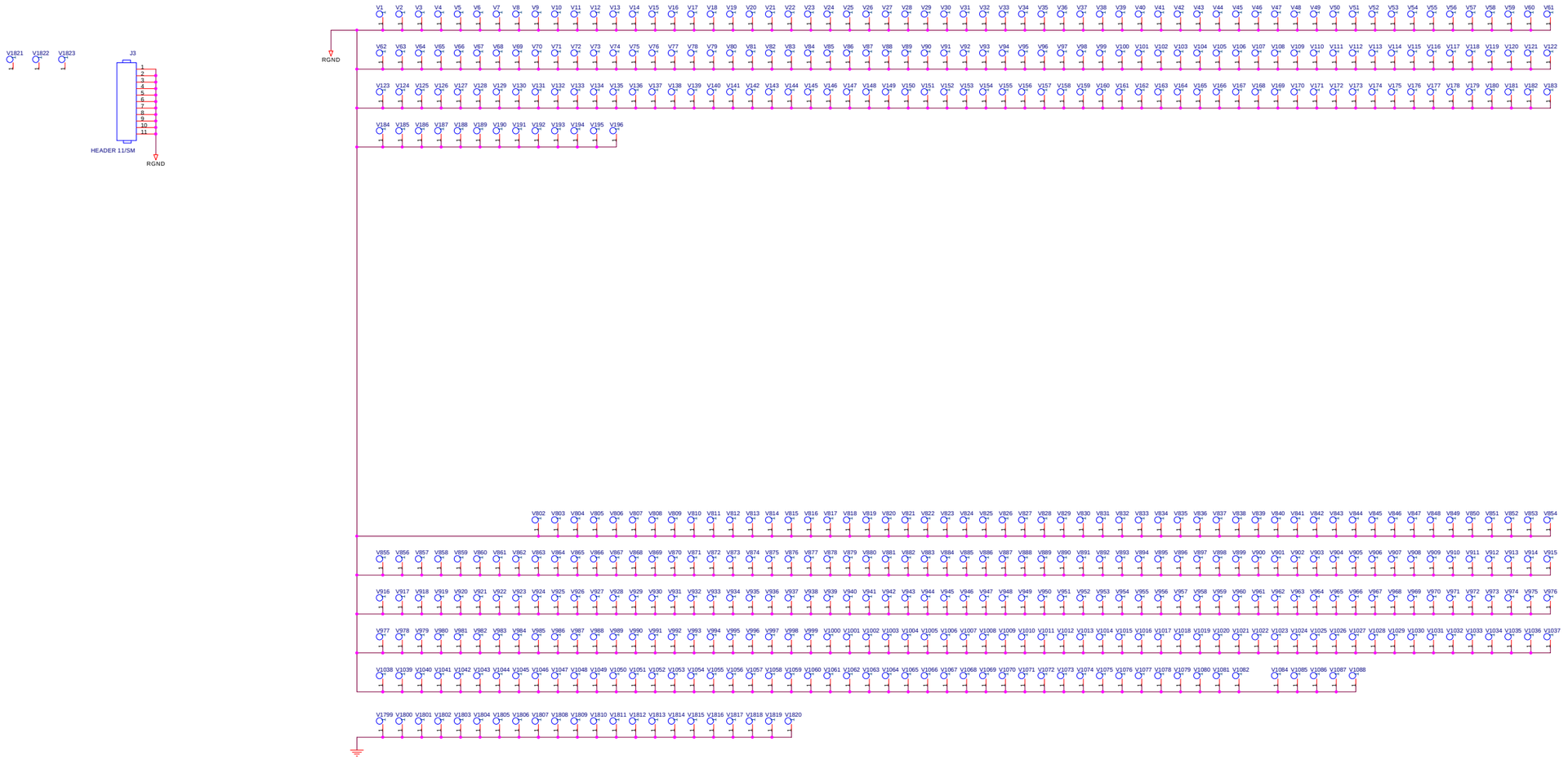


| | |
|---|---|
| Title | <Title> |
| Size D | Document Number <Doc> |
| Rev | <RevCode> |
| Date: Tuesday, February 24, 2004 | Sheet 2 of 3 |

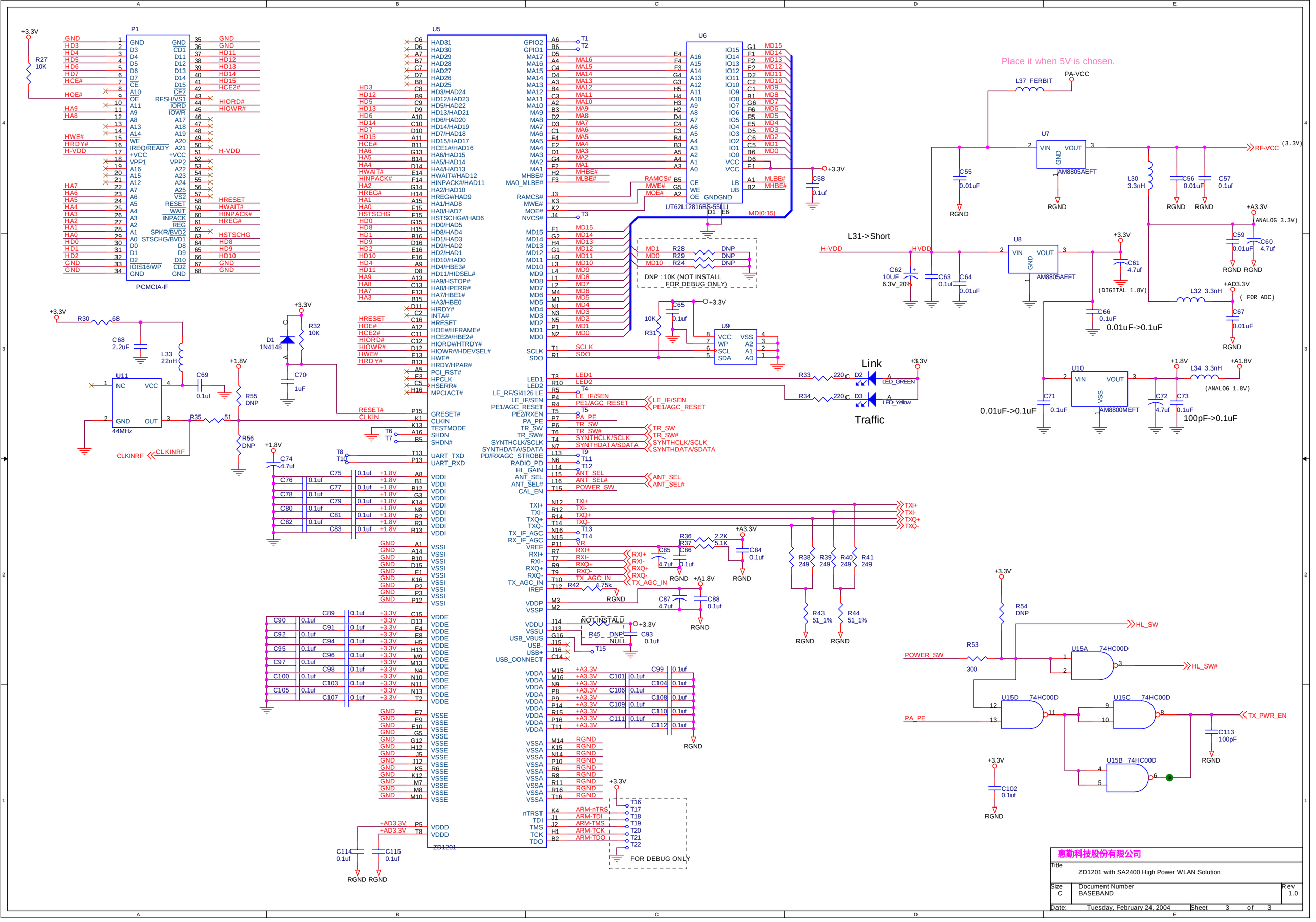


惠勤科技股份有限公司

Title: ZD1201 with SA2400 High Power WLAN Solution

| Size | Document Number | Rev |
|---|---|---|
| C | BASEBAND | 1.0 |

Date: Tuesday, February 24, 2004 Sheet 3 of 3