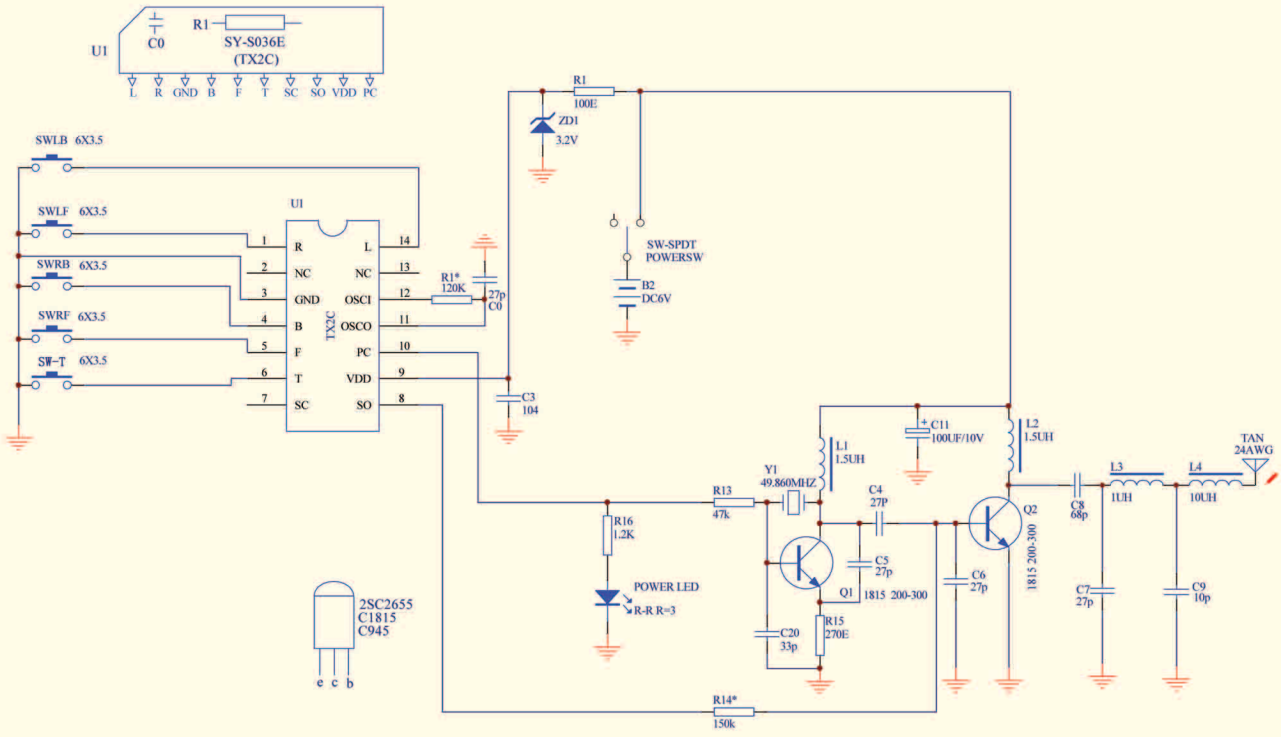

Title		
Size A4	Number	Revision V1.1
Date: 1-Apr-2005		Sheet of 1/1
File: D:\PROTE99\sy-s060.ddb		Drawn By: