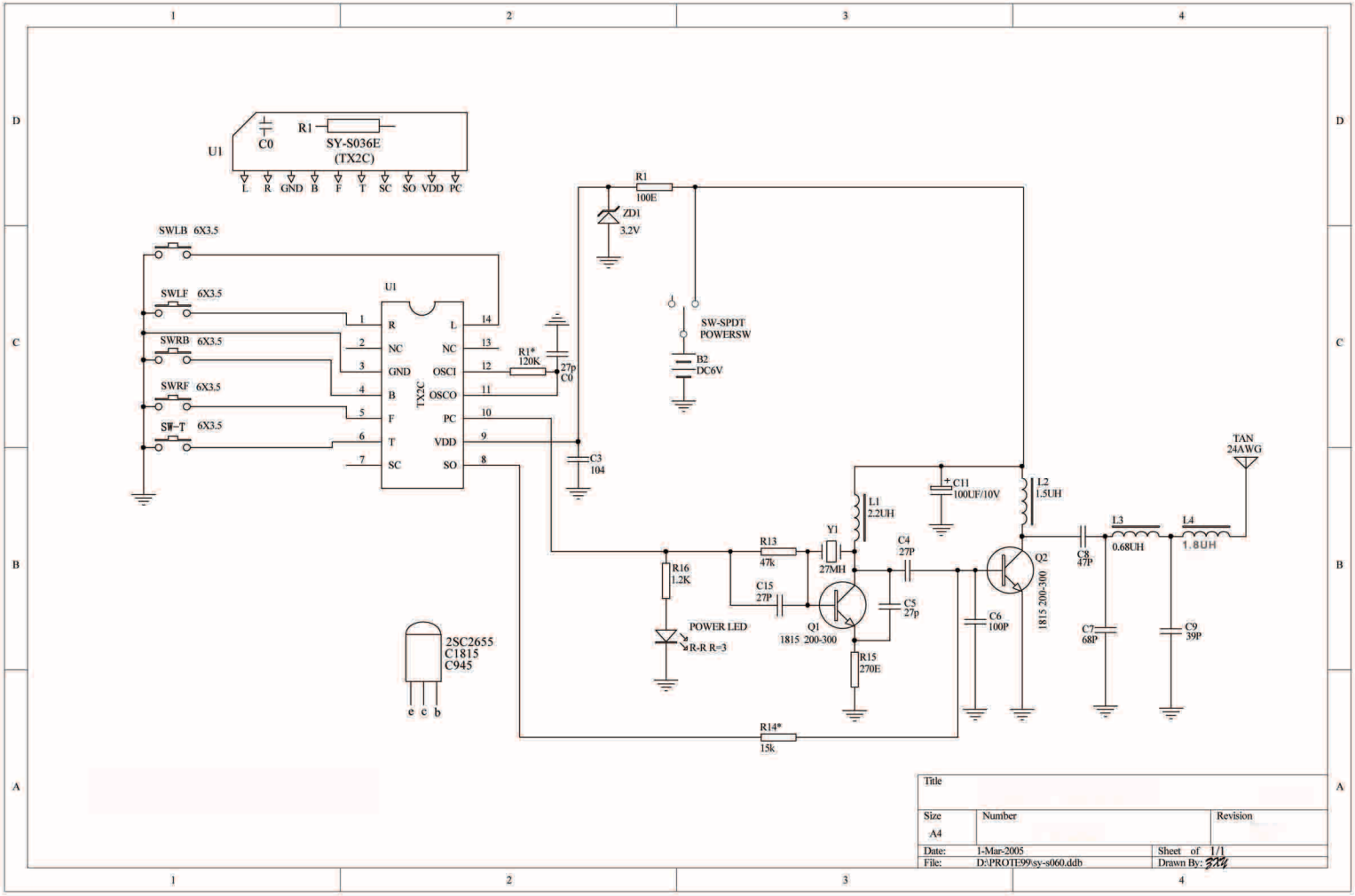
U1
C0
R1
SY-S036E
(TX2C)
L R GND B F T SC SO VDD PC
SWLB 6X3.5
SWLF 6X3.5
SWRB 6X3.5
SWRF 6X3.5
SW-T 6X3.5
U1
TX2C
R
NC
GND
B
F
T
SC
L
NC
OSCI
OSCO
PC
VDD
SO
R1*
120K
27p
C0
C3
104
R1
100E
ZD1
3.2V
SW-SPDT
POWERSW
B2
DC6V
C11
100UF/10V
L2
1.5UH
L1
2.2UH
Y1
27MH
R13
47k
C4
27P
R16
1.2K
C15
27P
Q1
1815 200-300
C5
27p
POWER LED
R-R R=3
R15
270E
C6
100P
Q2
1815 200-300
C8
47P
L3
0.68UH
L4
1.8UH
TAN
24AWG
C7
68P
C9
39P
2SC2655
C1815
C945
e c b
R14*
15k
Title
Size
A4
Number
Revision
Date: 1-Mar-2005
Sheet of 1/1
File: D:\PROTE99\sy-s060.ddb
Drawn By: