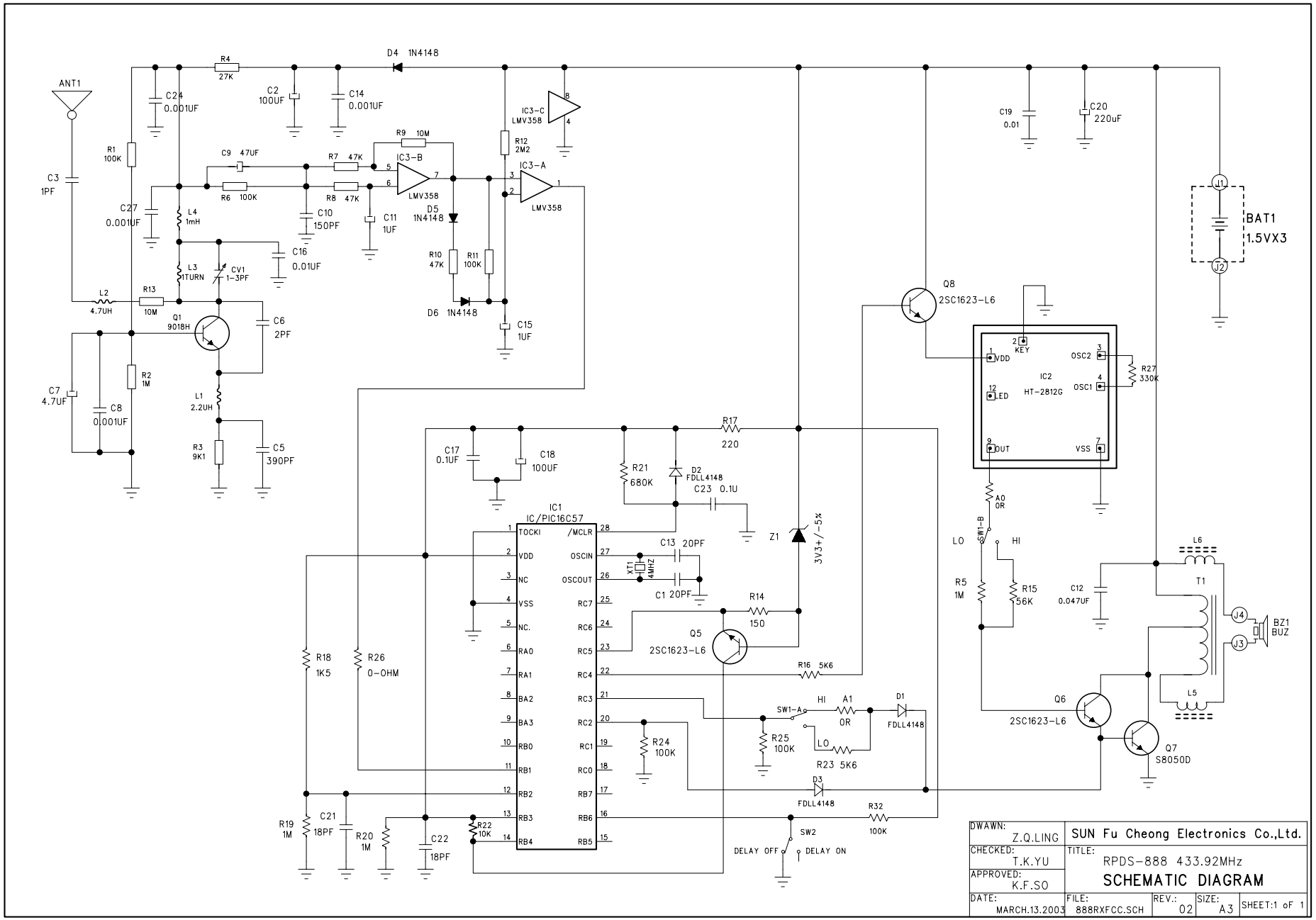
ANT1
C3 1PF
R1 100K
C24 0.001UF
R4 27K
C2 100UF
C14 0.001UF
D4 1N4148
IC3-C LMV358
R12 2M2
C19 0.01
C20 220uF
J1
BAT1 1.5VX3
J2
C9 47UF
R9 10M
R7 47K
IC3-B
IC3-A
R6 100K
R8 47K
LMV358
C27 0.001UF
L4 1mH
C10 150PF
C11 1UF
D5 1N4148
C16 0.01UF
L3 1TURN
CV1 1-3PF
R10 47K
R11 100K
L2 4.7UH
R13 10M
Q1 9018H
D6 1N4148
C15 1UF
C6 2PF
Q8 2SC1623-L6
IC2 HT-2812G
VDD
KEY
OSC2
OSC1
LED
OUT
VSS
R27 330K
C7 4.7UF
R2 1M
C8 0.001UF
L1 2.2UH
R3 9K1
C5 390PF
R17 220
C17 0.1UF
C18 100UF
R21 680K
D2 FDLL4148
C23 0.1U
IC1 IC/PIC16C57
TOCKI
/MCLR
OSCIN
OSCOUT
XT1 4MHz
C13 20PF
C1 20PF
Z1 3V3+/-5%
A0 0R
SW1-B
LO
HI
R5 1M
R15 56K
C12 0.047UF
L6
T1
J4
J3
BZ1 BUZ
R14 150
Q5 2SC1623-L6
R16 5K6
R18 1K5
R26 0-OHM
SW1-A
A1 0R
D1 FDLL4148
R25 100K
R23 5K6
R24 100K
Q6 2SC1623-L6
L5
Q7 S8050D
D3 FDLL4148
R32 100K
R19 1M
C21 18PF
R20 1M
C22 18PF
R22 10K
SW2
DELAY OFF
DELAY ON
DWAWN: Z.Q.LING
CHECKED: T.K.YU
APPROVED: K.F.SO
DATE: MARCH.13.2003
SUN Fu Cheong Electronics Co.,Ltd.
TITLE: RPDS-888 433.92MHz
SCHEMATIC DIAGRAM
FILE: 888RXFCC.SCH
REV.: 02
SIZE: A3
SHEET:1 oF 1