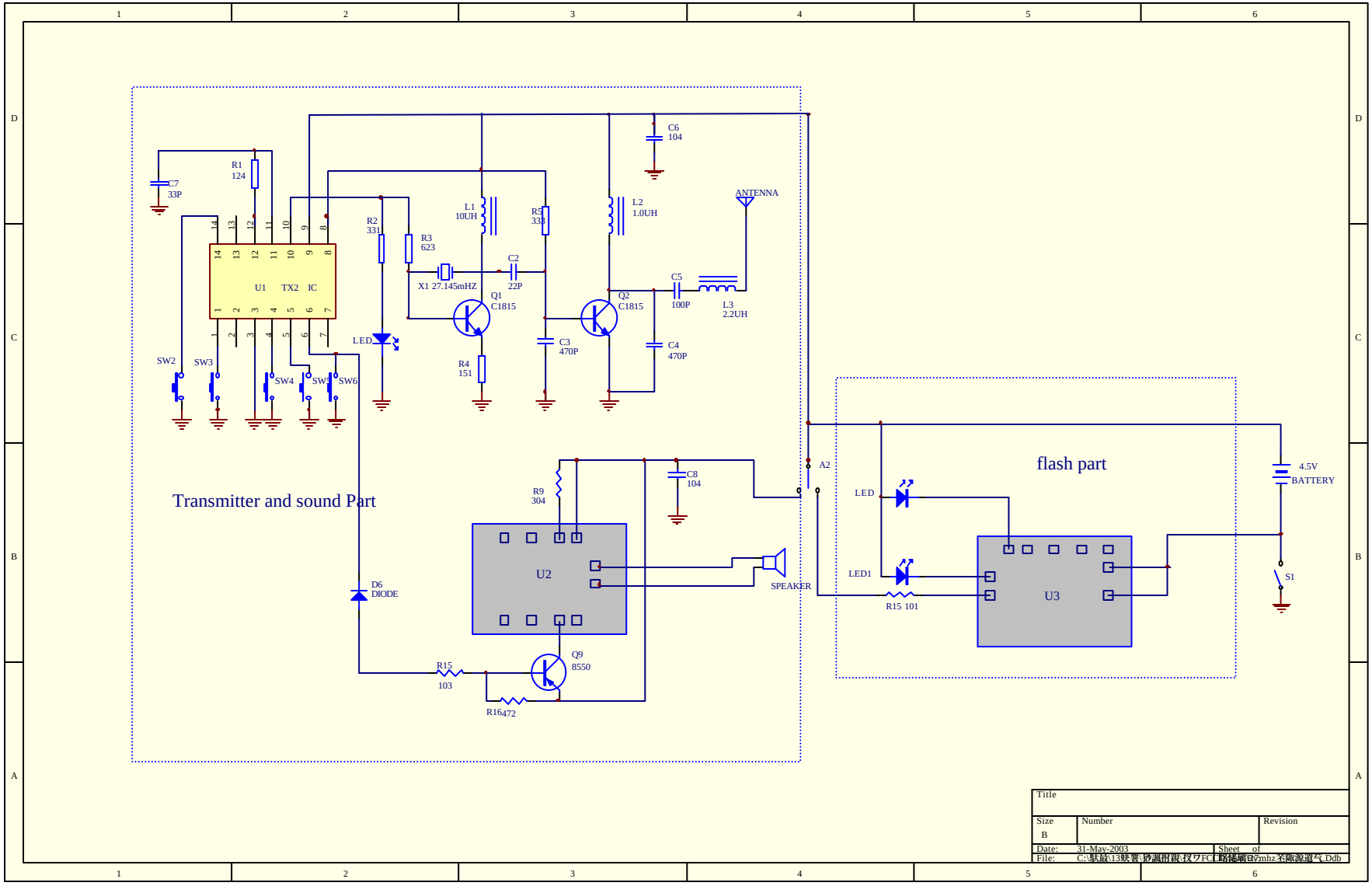
Transmitter and sound Part
flash part
U1 TX2 IC
R1 124
C7 33P
R2 331
R3 623
L1 10UH
R5 330
C2 22P
X1 27.145mHZ
Q1 C1815
R4 151
C3 470P
L2 1.0UH
Q2 C1815
C5 100P
C4 470P
L3 2.2UH
C6 104
ANTENNA
LED
SW2
SW3
SW4
SW5
SW6
R9 304
U2
C8 104
D6 DIODE
R15 103
R16 472
Q9 8550
SPEAKER
A2
LED
LED1
R15 101
U3
4.5V BATTERY
S1
Title
Size B
Number
Revision
Date: 31-May-2003
Sheet of
File: C:\