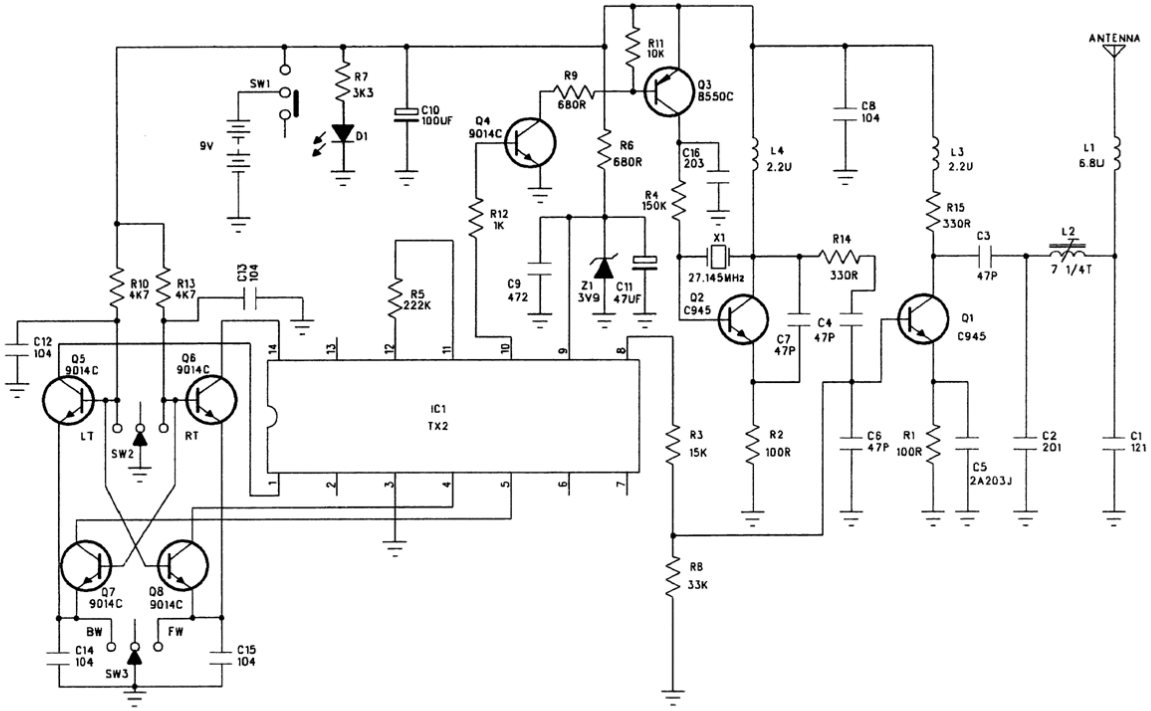

VectorZone Industrial Company Limite		
ITEM NAME: BOAT TX.SCH		
ITEM NO:2100-3 TX-00		REV:00
FILE:		
DRAWN:PAO	DATE:23/2/2003	SHEET:
APP.BY:PAO	DATE:2003/2/23	1 OF 1