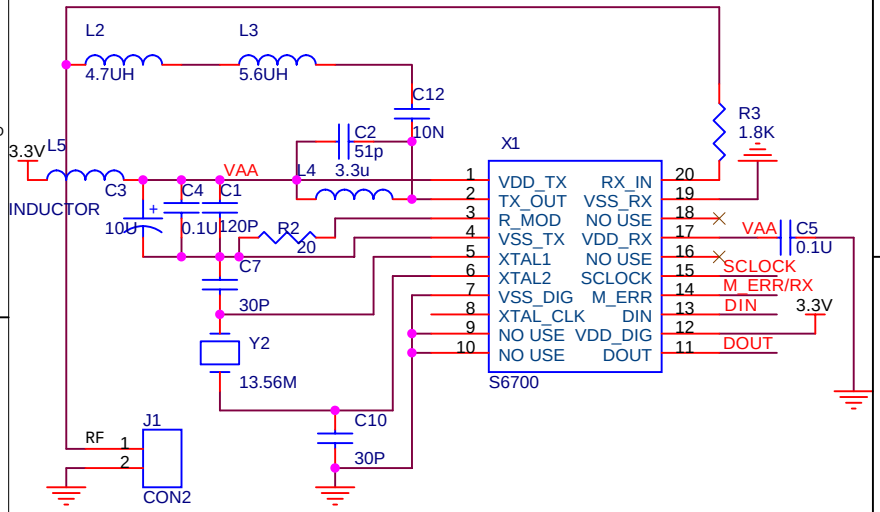

S6700IC AND Periphery CIRCUIT

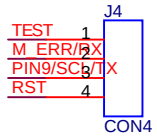

INPUT THAT DOWNLOAD SOFTWARE FROM UART

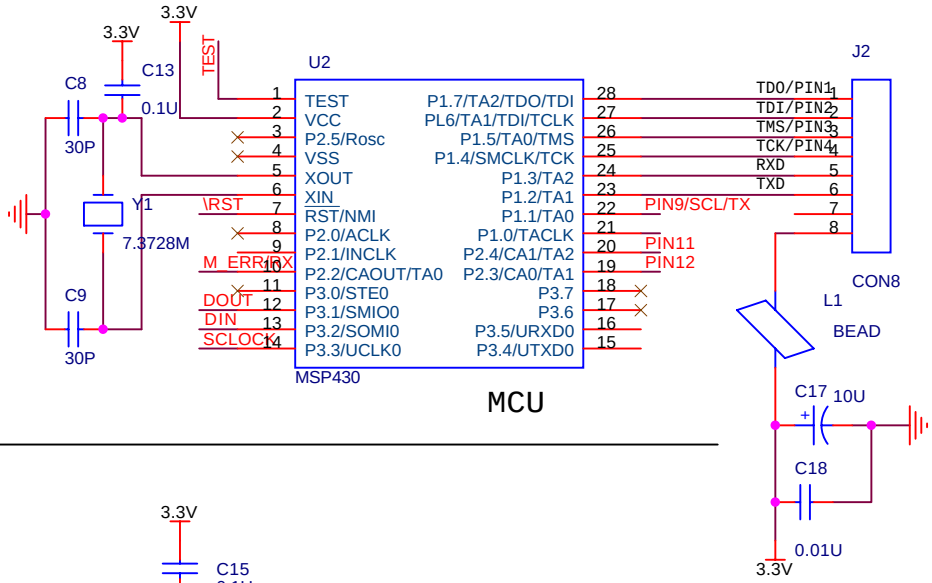

MCU

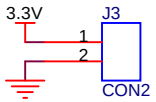

3.3VPOWER INPUT CONNECTOR

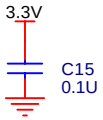

THE FILTER capacitance between POWER PIN AND GND PIN of S6700

Title	RFID MODULE V04	
Size A4	Document Number <Doc>	Rev 0.3
Date: 星期二, 七月 24, 2007	Sheet 4 of 4	